sikla

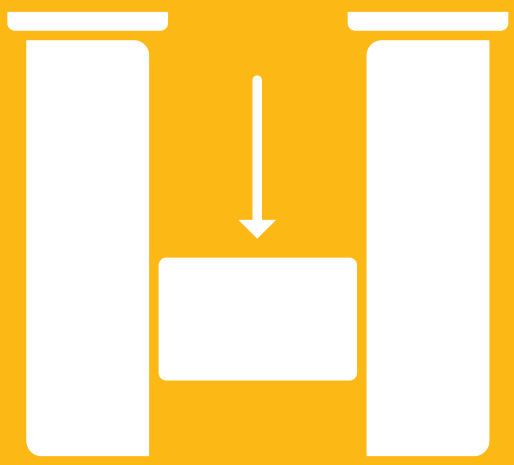

siMotec & siFramo

Static Guideline

Contacts

International Sales

Sikla GmbH
In der Lache 17
D-78056 VS-Schwenningen

Phone: +49 7720 948 930
Fax: +49 7720 948 140

processindustry.de@sikla.com

www.sikla.com

Content

Introduction **2**

siFramo ..... **3 - 4**

siFramo 80/30 ..... **5 - 9**

Beam Section TP F 80/30 5

L-Construction F 80/30 6

Frame F 80 - 80/30 7

Joining Beam Bracket F 80/30 horizontal 8

Beam Bracket AK-Q F 80/30 anchored 9

siFramo 80 ..... **10 - 21**

Beam Section TP F 80 10

L-Construction F 80 11

T-Support F 80 13

Frame F 80 15

Joining Beam Bracket F 80 horizontal 18

Joining Beam Bracket F 80 vertical 19

Beam Bracket F 80 - Variant a) clamped 20

Beam Bracket F 80 - Variant b) anchored 21

siFramo 100 ..... **22 - 33**

Beam Section TP F 100 22

L-Construction F 100 23

T-Support F 100 25

Frame F 100 27

Joining Beam Bracket F 100 horizontal 30

Joining Beam Bracket F 100 vertical 31

Beam Bracket F 100 - Variant a) clamped 32

Beam Bracket F 100 - Variant b) anchored 33

siFramo 100/160 ..... **34 - 45**

Beam Section TP F 100/160 34

L-Construction F 100/160 35

T-Support F 100/160 38

Frame F 100/160 40

Joining Beam Bracket F 100/160 horizontal 42

Joining Beam Bracket F 100/160 vertical 43

Beam Bracket F 100/160 - Variant a) clamped 44

Beam Bracket F 100/160 - Variant b) anchored 45

siFramo 100 - 100/160 combi ..... **46 - 47**

L-Construction F 100/160 - F 100 46

Frame F 100/160 - F 100 47

siMotec **49**

siMotec 100 ..... **50 - 52**

siMotec 120 ..... **53 - 55**

Supports (Pipe Shoes) ..... **56 - 74**

U-Bolts Supports ..... **75 - 76**

Rod Hangers ..... **77 - 78**

Application

Sikla „Installation Guidelines“ is intended to provide guidance for supporting constructions within industrial pipework and plant engineering consisting of the Sikla Systems siFramo 80, siFramo 100, siMotec 100 and siMotec 120.
All CE marked systems are subject to the certified factory production control according to EN 1090 and may therefore be used to EXC 2 for load-bearing structures.

Basis of calculation

Eurocode 3 (DIN EN 1993) „Design of steel structures“ provides the basis for determining the load capacity. Regarding serviceability the specified restrictions are allocated separately according to the design of the individual constructions. These limits may also be specified differently by the client. All deformations are determined on the basis of characteristic loads (γ_F = 1,0). The values of the permissible loads comply simultaneously the ultimate limit state and the serviceability limit state design. The respective governing load is listed as $F_{z,\ perm}$ in the Installation Guideline.

Load effects

Specified are permissible vertical loads $F_{z,\ perm}$ in kN (e.g. pipeline weights), which have to be understood as maximum values of characteristic load effects and consider a safety factor γ_F = 1,35.
Some Sikla constructions take into account additional friction forces $F_x = F_z * \mu_0$ for Sikla Pipe Shoes based on hot-dipped galvanized surface of Sikla beams which are calculated from pipe weight F_z and a friction coefficient μ_0 = 0,2. These variable forces from pipe expansion are taken into account with a safety factor γ_F = 1,5. Sliding or guided Pipe Shoes (Sikla slide elements) with a higher coefficient μ_0 > 0,2 (e.g. steel on steel) require an individual calculation.

Conditions

All loads are static loads at room temperature unless stated otherwise. Technical notes of the respective product data sheets for use and application range must be observed.

Load transmission into building structure

When fixing by anchors, or connection to existing cast-in channels, the structural safety analysis for the components used for this purpose must be done separately. When connecting to existing steel structures on site, resilience, support and torsional rigidity of the existing structure must be checked separately. In addition, when connecting with clamping sets, the static friction between clamping set and the on-site steel structure must fulfill the condition $\mu_0 \geq$ 0,2 (Sliding Surfaces Class D). On-site steel structure sizes (flange widths) of ≥ 80 mm are considered by using clamps for connection points.

Unless shown otherwise: force direction F_x = steel structure longitudinal axis. Connections to concrete must be designed using anchors that are suited to the local conditions and approved for the specific application. Preferred anchors are VMZ-A M12 (ETA-10/0260), BZ plus M12 (ETA-10/0259) or BZ3 M12 (ETA-20/0611). Axis distances are determined by the components. Reduction factor α_A = 0,7 for structural steel flange sizes ≥ 201 mm for End Support WBD F80, F100 and F100/160. Unless otherwise stated, all typicals designs are calculated using the Assembly Set MS 5P M12 S.

Technical Information

Installation conditions are summarized at the end of this brochure - in particular specifications regarding tightening torques, anchor spacing, general installation instructions etc.

Recyclebility of Products

Products must only be re-used if the recommended working loads have not been previously exceeded and if the coating has not been discernibly damaged.

General Remarks/ Disclaimer

This document is solely for being used by the receiver but remains property of Sikla. The technical drawings and all other content are to the best of our knowledge. Pictures and illustrations are non-committing. We can not be held responsible for printing errors and their implications. We reserve the right of making alterations and improvements without notice.

The present Guideline allows the user to select and to design supporting structures (constructions) easily. This document has been prepared in close cooperation with the following external specialists.

MPA STUTTGART Otto-Graf-Institut Materialprüfungsanstalt Universität Stuttgart · IPU Ingenieurgesellschaft Peil, Ummenhofer mbH Beratende Ingenieure Prüfingenieure für Baustatik · Breinlinger Ingenieure · KIT Karlsruher Institut für Technologie

Test Report numbers: 52140-901 0946 000; 52140-901 2896 000; 155204-2-a; 142508 T1-3; K14-6005; H14-176;

03/2026

siFramo

Beam Section TP F 80 and TP F 100

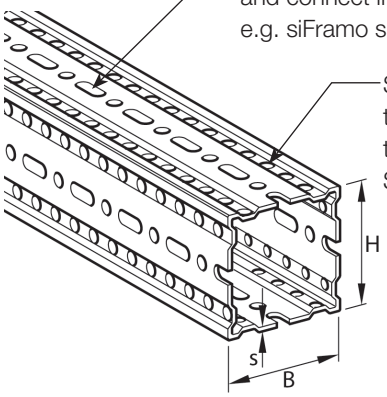

Self-Forming-Screws FLS F pass- through the slotted holes Ø11x30 mm and connect into the siFramo components within the box section: e.g. siFramo square End Support WBD F and Framo octagonal STA F.

Self-Forming-Screws FLS screws directly into the Ø 9,1 mm round-holes (perforations) running along the outer edges of each face of the siFramo beam. All connecting siFramo components are fixed in this way: e.g. Cantilever Brackets AK F, End Supports STA F, Channel Adapters SA F and Slide Sets GS F.

Self-Forming-Screw FLS F

Thread- forming screw with locking- serration for all connections.

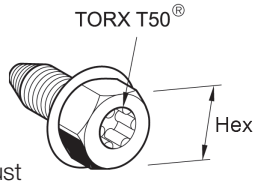

Attention!

▶ *Max. applied torque no more than 50^{+10}_{-0} Nm !*

Assembly of Beam Section TP F with WBD-End Support and End Support STA F

For best performance the Self-Forming-Screw FLS F must be applied to both sides in greatest possible distance apart 2 x 2 screws opposite one another.

Distance between end of section and end-plate: ≤ 10 mm.

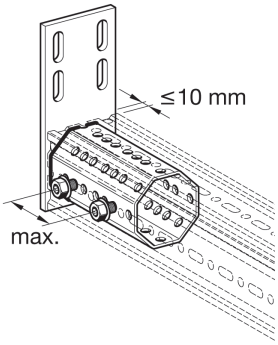

Assembly to Beam Section TP F, e.g. Cantilever Bracket AK F

Offset hole pattern allow for connection at one level without collision of bolts inside the box section for all components with end-plate (e.g. STA F, SA F).

4 Self-Forming-Screws are required to fix each end-plate!

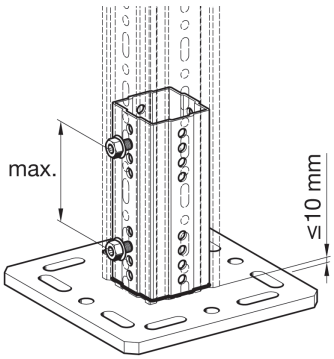

Each connection to the section requires 4 screws! Inserted through the slotted hole, these will screw into the round hole of the section underneath.

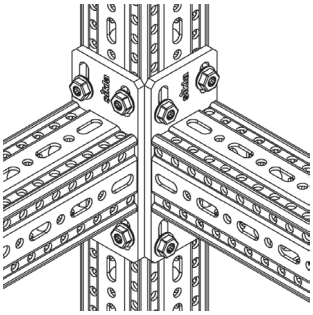

Technical Data

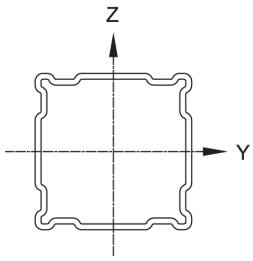

Description Beam Section [mm]	Description Axis	Wall Thickness s [mm]	Moment of Inertia I_y [cm⁴]	Moment of Inertia I_z [cm⁴]	Section Modulus W_y [cm³]	Section Modulus W_z [cm³]	Radius of Inertia i_y [cm]	Radius of Inertia i_z [cm]	Torsional Moment It [cm⁴]	Cross Section A [cm²]	Weight G [kg/m]
TP F 80/30	Y Z	3,0	33,15*)	6,26*)	7,75*)	4,12*)	3,59	1,56	7,91	2,57*)	4,3
TP F 80/80	Z Y	3,0	61,54*)		13,26*)		3,61		45,13	4,73*)	6,4
TP F 100/100		4,0	173,44*)		32,83*)		4,78		129,35	7,60*)	10,8
TP F 100/160	Z Y	4,0	547,73*)	269,90*)	67,49*)	47,15*)	6,21	4,36	185,62	14,22*)	14,3

Beam Section TP F. Steel. Hot-dipped-galvanized according to DIN EN ISO 1461 tZn o.
All structural data takes perforation into account.
*) determination of effective values by tests.

Connection to primary steel structure with Assembly Set MS 5P M12 S and MS 5P M16 S

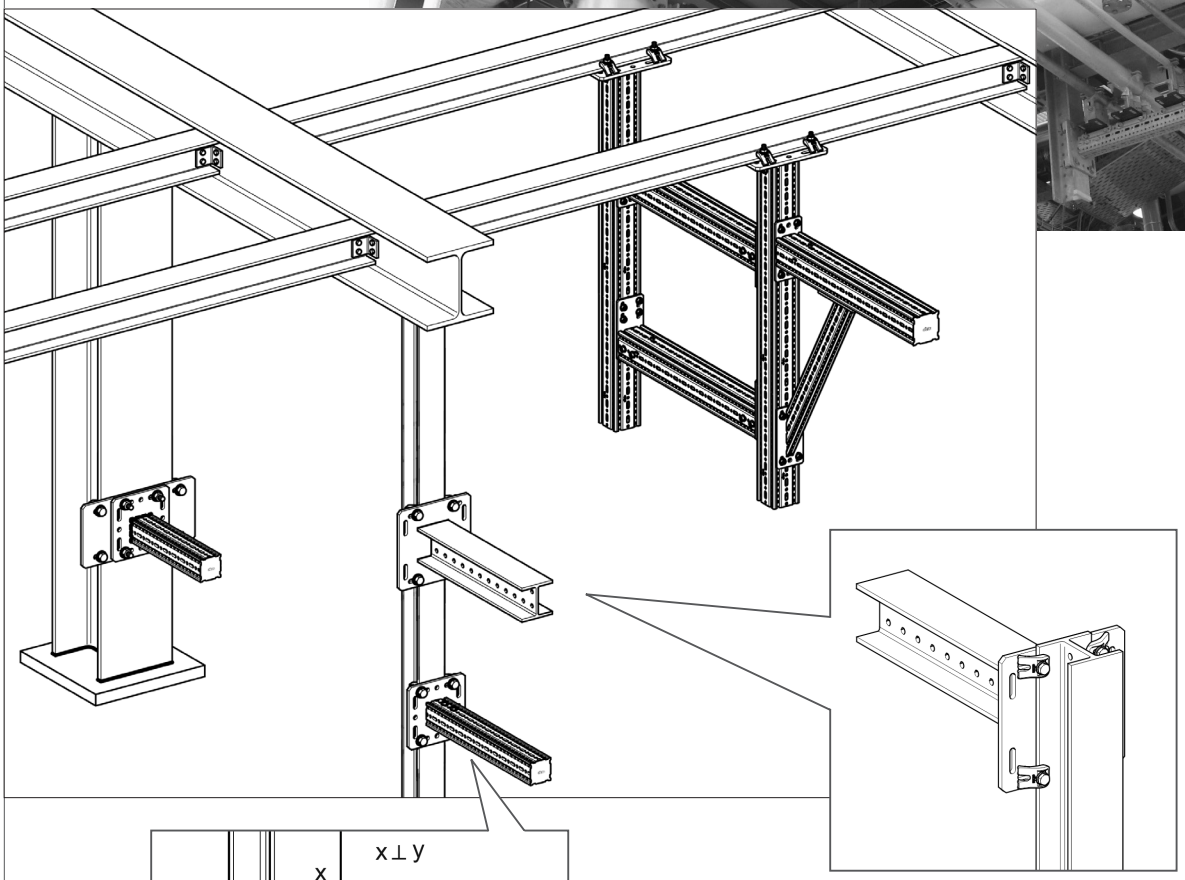

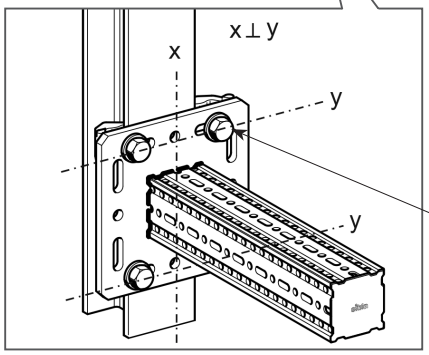

Type	Thread	Max. Size range	Tightening torque / Angle of rotation
Assembly Set MS 5P M12 S	M12	30 mm	60 Nm / 90°
Assembly Set MS 5P M16 S	M16	40 mm	140 Nm / 90°

Use Assembly Set always into slotted hole rows (y) in 90° direction to the main axis of the structural beam (x).

03/2026

Working loads in accordance with Eurocode 3

Beam Section TP F 80/30

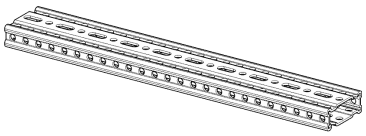

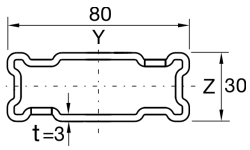

Single-span beam with uniaxial load

Distributed Load

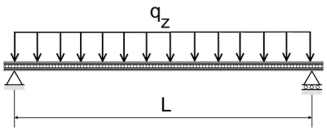

L_{max}	$q_{z.\ perm}$	F_z (q_z * L)
[mm]	[kN/m]	[kN]
500	**31,42**	**15,71**
1000	**4,98**	**4,98**
1500	**1,45**	**2,17**
2000	**0,59**	**1,17**
2500	**0,28**	**0,70**

q_z [kN/m] as permanent load over L.

Point Load

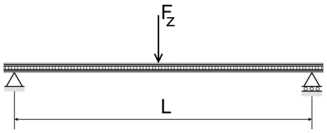

L_{max}	$F_{z.\ perm}$
[mm]	[kN]
500	**7,85**
1000	**3,11**
1500	**1,36**
2000	**0,73**
2500	**0,44**

F_z [kN] as a permanent load at L/2.

2 Point Loads

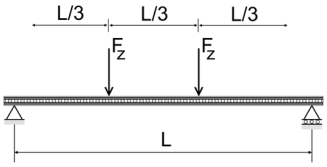

L_{max}	$F_{z.\ perm}$
[mm]	[kN]
500	**5,89**
1000	**1,83**
1500	**0,80**
2000	**0,43**
2500	**0,26**

F_z [kN] as permanent loads at L/3 and 2*L/3.

3 Point Loads

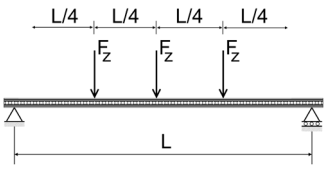

L_{max}	$F_{z.\ perm}$
[mm]	[kN]
500	**3,93**
1000	**1,31**
1500	**0,57**
2000	**0,31**
2500	**0,18**

F_z [kN] as permanent loads at L/4. L/2 and 3*L/4.

Max. bending L/200.
Dead weight of the profile is considered.

Working loads in accordance with Eurocode 3

L-Construction F 80 - 80/30

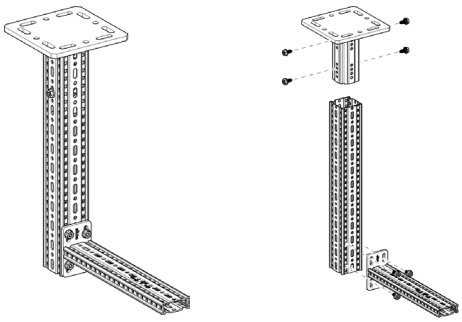

Part List
1 x End Support WBD-4KT 80/120-F 80
1 x Beam Section TP F 80
1 x Cantilever Bracket AK F 80/30
8 x Self-Forming-Screw FLS F

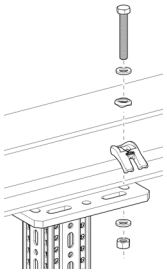

Note:
Unless otherwise stated, the information is based on installation using the Assembly Set MS 5P M12 S. If fixings are done using anchors, these must be verified separately.

Distributed Load

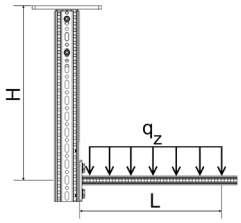

H_{max} \ L_{max}	300		500		700	
	$q_{z.\,perm}$	F_z (q_z * L)	$q_{z.\,perm}$	F_z (q_z * L)	$q_{z.\,perm}$	F_z (q_z * L)
[mm]	[kN/m]	[kN]	[kN/m]	[kN]	[kN/m]	[kN]
500	**6,96**	**2,09**	**2,39**	**1,19**	**1,12**	**0,78**
1000	**5,91**	**1,77**	**2,08**	**1,04**	**0,99**	**0,69**
1500	**5,13**	**1,54**	**1,84**	**0,92**	**0,88**	**0,62**
2000	**4,54**	**1,36**	**1,65**	**0,82**	**0,80**	**0,56**

q_z [kN/m] as permanent load over L.

Point Load

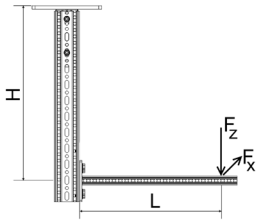

H_{max} \ L_{max}	300		500		700	
	$F_{z.\,perm}$ for		$F_{z.\,perm}$ for		$F_{z.\,perm}$ for	
	$F_x = 0$	$F_x = \mu_0 * F_z$	$F_x = 0$	$F_x = \mu_0 * F_z$	$F_x = 0$	$F_x = \mu_0 * F_z$
[mm]	[kN]	[kN]	[kN]	[kN]	[kN]	[kN]
500	**1,07**	**1,07**	**0,57**	**0,57**	**0,36**	**0,36**
1000	**0,94**	**0,94**	**0,51**	**0,51**	**0,32**	**0,32**
1500	**0,83**	**0,83**	**0,46**	**0,46**	**0,29**	**0,29**
2000	**0,75**	**0,75**	**0,42**	**0,42**	**0,27**	**0,27**

F_z [kN] as a permanent load at distance L. F_x [kN] as a variable load at distance L.

2 Point Loads

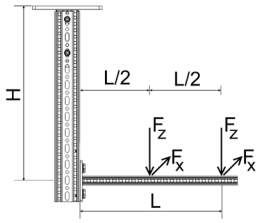

H_{max} \ L_{max}	300		500		700	
	$F_{z.\,perm}$ for		$F_{z.\,perm}$ for		$F_{z.\,perm}$ for	
	$F_x = 0$	$F_x = \mu_0 * F_z$	$F_x = 0$	$F_x = \mu_0 * F_z$	$F_x = 0$	$F_x = \mu_0 * F_z$
[mm]	[kN]	[kN]	[kN]	[kN]	[kN]	[kN]
500	**0,69**	**0,69**	**0,38**	**0,38**	**0,24**	**0,24**
1000	**0,60**	**0,60**	**0,34**	**0,34**	**0,22**	**0,22**
1500	**0,52**	**0,52**	**0,30**	**0,30**	**0,20**	**0,20**
2000	**0,47**	**0,47**	**0,27**	**0,27**	**0,18**	**0,18**

F_z [kN] as permanent loads at distance L and L/2. F_x [kN] as variable loads at distance L and L/2.

3 Point Loads

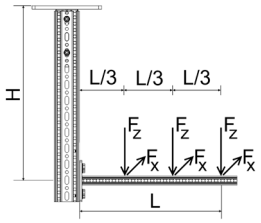

H_{max} \ L_{max}	300		500		700	
	$F_{z.\,perm}$ for		$F_{z.\,perm}$ for		$F_{z.\,perm}$ for	
	$F_x = 0$	$F_x = \mu_0 * F_z$	$F_x = 0$	$F_x = \mu_0 * F_z$	$F_x = 0$	$F_x = \mu_0 * F_z$
[mm]	[kN]	[kN]	[kN]	[kN]	[kN]	[kN]
500	**0,55**	**0,54**	**0,30**	**0,30**	**0,19**	**0,19**
1000	**0,47**	**0,46**	**0,26**	**0,26**	**0,17**	**0,17**
1500	**0,41**	**0,40**	**0,23**	**0,23**	**0,15**	**0,15**
2000	**0,36**	**0,36**	**0,21**	**0,21**	**0,14**	**0,14**

F_z [kN] as permanent loads at distance L. 2*L/3 and L/3. F_x [kN] as variable loads at distance L. 2*L/3 and L/3.

All illustrated structures are able to be installed standing as well.
Friction coefficient μ_0 = 0,2 for friction in longitudinal direction. Max. deviation H/100; L/100.

03/2026

Working loads in accordance with Eurocode 3

Frame F 80 - 80/30

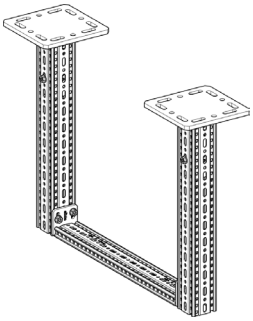

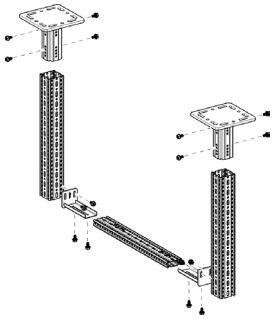

Part List
2 x End Support WBD-4KT 80/120-F 80
2 x Beam Section TP F 80
1 x Beam Section TP F 80/30
2 x End Support STA-E F 80/30-F 80
16 x Self-Forming-Screw FLS F

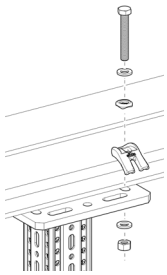

Note:
Unless otherwise stated, the information is based on installation using the Assembly Set MS 5P M12 S. If fixings are done using anchors, these must be verified separately.

Distributed Load

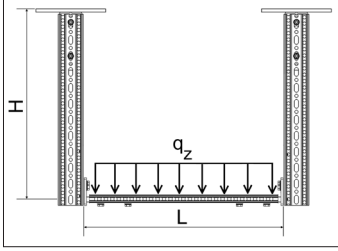

H_{max} \ L_{max}	500		1000		1500		2000		2500		3000	
	$q_{z.\,perm}$	F_z (q_z* L)	$q_{z.\,perm}$	F_z (q_z* L)	$q_{z.\,perm}$	F_z (q_z* L)	$q_{z.\,perm}$	F_z (q_z* L)	$q_{z.\,perm}$	F_z (q_z* L)	$q_{z.\,perm}$	F_z (q_z* L)
[mm]	[kN/m]	[kN]	[kN/m]	[kN]	[kN/m]	[kN]	[kN/m]	[kN]	[kN/m]	[kN]	[kN/m]	[kN]
500	**18,91**	**9,46**	**5,46**	**5,46**	**1,82**	**2,74**	**0,88**	**1,76**	**0,50**	**1,24**	**0,31**	**0,93**
1000	**18,81**	**9,41**	**5,43**	**5,43**	**1,82**	**2,73**	**0,88**	**1,76**	**0,50**	**1,24**	**0,31**	**0,93**
1500	**18,71**	**9,36**	**5,43**	**5,43**	**1,81**	**2,71**	**0,88**	**1,75**	**0,49**	**1,23**	**0,31**	**0,93**
2000	**18,64**	**9,32**	**5,41**	**5,41**	**1,80**	**2,70**	**0,87**	**1,74**	**0,49**	**1,23**	**0,31**	**0,92**

q_z [kN/m] as permanent load over L.

Point Load

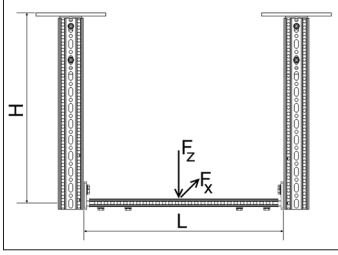

H_{max} \ L_{max}	500		1000		1500		2000		2500		3000	
	$F_{z.\,perm}$ for		$F_{z.\,perm}$ for		$F_{z.\,perm}$ for		$F_{z.\,perm}$ for		$F_{z.\,perm}$ for		$F_{z.\,perm}$ for	
	$F_x = 0$	$F_x = \mu_0 * F_z$	$F_x = 0$	$F_x = \mu_0 * F_z$	$F_x = 0$	$F_x = \mu_0 * F_z$	$F_x = 0$	$F_x = \mu_0 * F_z$	$F_x = 0$	$F_x = \mu_0 * F_z$	$F_x = 0$	$F_x = \mu_0 * F_z$
[mm]	[kN]	[kN]	[kN]	[kN]	[kN]	[kN]	[kN]	[kN]	[kN]	[kN]	[kN]	[kN]
500	**7,74**	**6,93**	**3,47**	**3,26**	**1,84**	**1,73**	**1,12**	**1,05**	**0,75**	**0,71**	**0,56**	**0,52**
1000	**7,67**	**6,92**	**3,45**	**3,25**	**1,83**	**1,72**	**1,11**	**1,05**	**0,75**	**0,71**	**0,56**	**0,52**
1500	**7,59**	**5,71**	**3,44**	**3,23**	**1,83**	**1,72**	**1,11**	**1,04**	**0,75**	**0,71**	**0,55**	**0,52**
2000	**7,50**	**3,86**	**3,42**	**3,21**	**1,82**	**1,71**	**1,11**	**1,04**	**0,75**	**0,70**	**0,55**	**0,52**

F_z [kN] as a permanent load at distance L/2. F_x [kN] as a variable load at distance L/2.

2 Point Loads

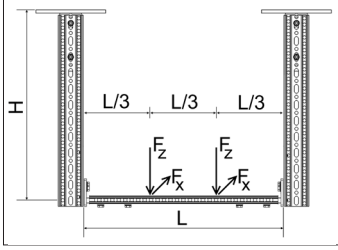

H_{max} \ L_{max}	500		1000		1500		2000		2500		3000	
	$F_{z.\,perm}$ for		$F_{z.\,perm}$ for		$F_{z.\,perm}$ for		$F_{z.\,perm}$ for		$F_{z.\,perm}$ for		$F_{z.\,perm}$ for	
	$F_x = 0$	$F_x = \mu_0 * F_z$	$F_x = 0$	$F_x = \mu_0 * F_z$	$F_x = 0$	$F_x = \mu_0 * F_z$	$F_x = 0$	$F_x = \mu_0 * F_z$	$F_x = 0$	$F_x = \mu_0 * F_z$	$F_x = 0$	$F_x = \mu_0 * F_z$
[mm]	[kN]	[kN]	[kN]	[kN]	[kN]	[kN]	[kN]	[kN]	[kN]	[kN]	[kN]	[kN]
500	**4,57**	**4,29**	**2,06**	**1,81**	**1,12**	**1,05**	**0,68**	**0,64**	**0,46**	**0,43**	**0,34**	**0,32**
1000	**4,56**	**4,28**	**2,05**	**1,81**	**1,11**	**1,05**	**0,67**	**0,63**	**0,46**	**0,43**	**0,33**	**0,31**
1500	**4,55**	**2,86**	**2,00**	**1,77**	**1,11**	**1,04**	**0,67**	**0,63**	**0,46**	**0,43**	**0,33**	**0,31**
2000	**4,50**	**1,93**	**1,99**	**1,76**	**1,10**	**1,04**	**0,67**	**0,63**	**0,45**	**0,43**	**0,33**	**0,31**

F_z [kN] as permanent loads at distance 2*L/3 and L/3. F_x [kN] as variable loads at distance 2*L/3 and L/3.

3 Point Loads

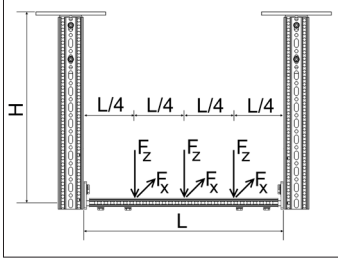

H_{max} \ L_{max}	500		1000		1500		2000		2500		3000	
	$F_{z.\,perm}$ for		$F_{z.\,perm}$ for		$F_{z.\,perm}$ for		$F_{z.\,perm}$ for		$F_{z.\,perm}$ for		$F_{z.\,perm}$ for	
	$F_x = 0$	$F_x = \mu_0 * F_z$	$F_x = 0$	$F_x = \mu_0 * F_z$	$F_x = 0$	$F_x = \mu_0 * F_z$	$F_x = 0$	$F_x = \mu_0 * F_z$	$F_x = 0$	$F_x = \mu_0 * F_z$	$F_x = 0$	$F_x = \mu_0 * F_z$
[mm]	[kN]	[kN]	[kN]	[kN]	[kN]	[kN]	[kN]	[kN]	[kN]	[kN]	[kN]	[kN]
500	**3,11**	**2,92**	**1,46**	**1,29**	**0,76**	**0,69**	**0,47**	**0,43**	**0,33**	**0,31**	**0,24**	**0,23**
1000	**3,07**	**2,89**	**1,45**	**1,27**	**0,76**	**0,69**	**0,47**	**0,43**	**0,33**	**0,31**	**0,24**	**0,23**
1500	**3,03**	**1,91**	**1,43**	**1,26**	**0,76**	**0,69**	**0,47**	**0,43**	**0,33**	**0,30**	**0,24**	**0,23**
2000	**2,99**	**1,29**	**1,42**	**1,25**	**0,76**	**0,69**	**0,46**	**0,43**	**0,33**	**0,30**	**0,24**	**0,23**

F_z [kN] as permanent loads at distance 3*L/4. L/2 and L/4. F_x [kN] as variable loads at distance 3*L/4. L/4 and L/4.

All illustrated structures are able to be installed standing as well.
Friction coefficient $\mu_0 = 0{,}2$ for friction in longitudinal direction. Max. deviation H/100; L/200.

Working loads in accordance with Eurocode 3

Joining Beam Bracket F 80/30 horizontal

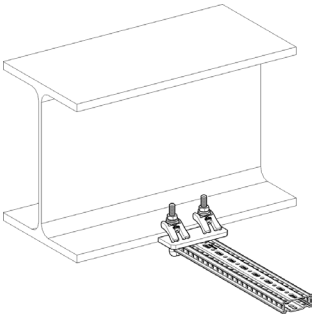

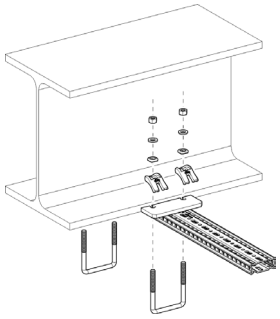

Part List
1 x Beam Section TP F 80/30
2 x U-Holder SB F 80/30-40

Distributed Load

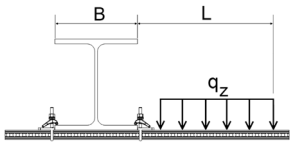

B_{max} \ L_{max}	300		500		700		900		1100	
	$q_{z.\,perm}$	F_z (q_z * L)	$q_{z.\,perm}$	F_z (q_z * L)	$q_{z.\,perm}$	F_z (q_z * L)	$q_{z.\,perm}$	F_z (q_z * L)	$q_{z.\,perm}$	F_z (q_z * L)
[mm]	[kN/m]	[kN]	[kN/m]	[kN]	[kN/m]	[kN]	[kN/m]	[kN]	[kN/m]	[kN]
100	**10,27**	**3,08**	**3,56**	**1,78**	**1,78**	**1,24**	**1,05**	**0,95**	**0,69**	**0,76**
150	**10,27**	**3,08**	**3,56**	**1,78**	**1,78**	**1,24**	**1,05**	**0,95**	**0,69**	**0,76**
200	**10,27**	**3,08**	**3,56**	**1,78**	**1,78**	**1,24**	**1,05**	**0,95**	**0,69**	**0,76**
250	**10,27**	**3,08**	**3,56**	**1,78**	**1,78**	**1,24**	**1,05**	**0,95**	**0,69**	**0,76**
300	**10,27**	**3,08**	**3,56**	**1,78**	**1,78**	**1,24**	**1,05**	**0,95**	**0,69**	**0,76**

q_z [kN/m] as permanent load over L.

Point Load

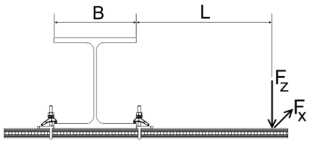

B_{max} \ L_{max}	300		500		700		900		1100	
	$F_{z.\,perm}$ for		$F_{z.\,perm}$ for		$F_{z.\,perm}$ for		$F_{z.\,perm}$ for		$F_{z.\,perm}$ for	
	$F_x = 0$	$F_x = \mu_0 * F_z$	$F_x = 0$	$F_x = \mu_0 * F_z$	$F_x = 0$	$F_x = \mu_0 * F_z$	$F_x = 0$	$F_x = \mu_0 * F_z$	$F_x = 0$	$F_x = \mu_0 * F_z$
[mm]	[kN]	[kN]	[kN]	[kN]	[kN]	[kN]	[kN]	[kN]	[kN]	[kN]
100	**1,47**	**1,26**	**0,88**	**0,78**	**0,63**	**0,56**	**0,49**	**0,43**	**0,40**	**0,35**
150	**1,47**	**1,30**	**0,88**	**0,78**	**0,63**	**0,56**	**0,49**	**0,43**	**0,40**	**0,35**
200	**1,47**	**1,30**	**0,88**	**0,78**	**0,63**	**0,56**	**0,49**	**0,43**	**0,40**	**0,35**
250	**1,47**	**1,30**	**0,88**	**0,78**	**0,63**	**0,56**	**0,49**	**0,43**	**0,40**	**0,35**
300	**1,47**	**1,30**	**0,88**	**0,78**	**0,63**	**0,56**	**0,49**	**0,43**	**0,40**	**0,35**

F_z [kN] as a permanent load at distance L. F_x [kN] as a variable load at distance L.

2 Point Loads

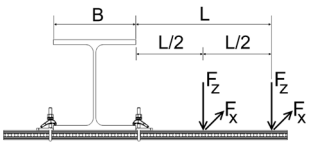

B_{max} \ L_{max}	300		500		700		900		1100	
	$F_{z.\,perm}$ for		$F_{z.\,perm}$ for		$F_{z.\,perm}$ for		$F_{z.\,perm}$ for		$F_{z.\,perm}$ for	
	$F_x = 0$	$F_x = \mu_0 * F_z$	$F_x = 0$	$F_x = \mu_0 * F_z$	$F_x = 0$	$F_x = \mu_0 * F_z$	$F_x = 0$	$F_x = \mu_0 * F_z$	$F_x = 0$	$F_x = \mu_0 * F_z$
[mm]	[kN]	[kN]	[kN]	[kN]	[kN]	[kN]	[kN]	[kN]	[kN]	[kN]
100	**0,98**	**0,78**	**0,59**	**0,53**	**0,42**	**0,40**	**0,32**	**0,32**	**0,26**	**0,26**
150	**0,98**	**1,13**	**0,59**	**0,78**	**0,42**	**0,56**	**0,32**	**0,43**	**0,26**	**0,35**
200	**0,98**	**1,30**	**0,59**	**0,78**	**0,42**	**0,56**	**0,32**	**0,43**	**0,26**	**0,35**
250	**0,98**	**1,30**	**0,59**	**0,78**	**0,42**	**0,56**	**0,32**	**0,43**	**0,26**	**0,35**
300	**0,98**	**1,30**	**0,59**	**0,78**	**0,42**	**0,56**	**0,32**	**0,43**	**0,26**	**0,24**

F_z [kN] as permanent loads at distance L und L/2. F_x [kN] as variable loads at distance L and L/2.

3 Point Loads

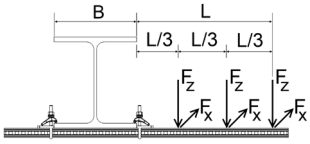

B_{max} \ L_{max}	300		500		700		900		1100	
	$F_{z.\,perm}$ for		$F_{z.\,perm}$ for		$F_{z.\,perm}$ for		$F_{z.\,perm}$ for		$F_{z.\,perm}$ for	
	$F_x = 0$	$F_x = \mu_0 * F_z$	$F_x = 0$	$F_x = \mu_0 * F_z$	$F_x = 0$	$F_x = \mu_0 * F_z$	$F_x = 0$	$F_x = \mu_0 * F_z$	$F_x = 0$	$F_x = \mu_0 * F_z$
[mm]	[kN]	[kN]	[kN]	[kN]	[kN]	[kN]	[kN]	[kN]	[kN]	[kN]
100	**0,73**	**0,57**	**0,44**	**0,39**	**0,31**	**0,28**	**0,24**	**0,22**	**0,20**	**0,18**
150	**0,73**	**0,65**	**0,44**	**0,39**	**0,31**	**0,28**	**0,24**	**0,22**	**0,20**	**0,18**
200	**0,73**	**0,65**	**0,44**	**0,39**	**0,31**	**0,28**	**0,24**	**0,22**	**0,20**	**0,18**
250	**0,73**	**0,65**	**0,44**	**0,39**	**0,31**	**0,28**	**0,24**	**0,22**	**0,20**	**0,18**
300	**0,73**	**0,65**	**0,44**	**0,39**	**0,31**	**0,28**	**0,24**	**0,22**	**0,20**	**0,18**

F_z [kN] as permanent loads at distance L. 2*L/3 and L/3. F_x [kN] as variable loads at distance L. 2*L/3 and L/3.

Friction coefficient μ_0 = 0,2 for friction in longitudinal direction. Max. deviation L/100.

03/2026

Working loads in accordance with Eurocode 3

Beam Bracket AK-Q F 80/30 anchored

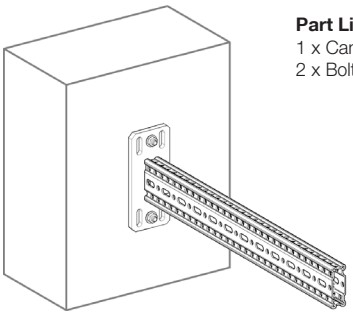

Part List
1 x Cantilever Bracket AK-Q F 80/30
2 x Bolt Anchor AN BZ plus M12 hef. 70

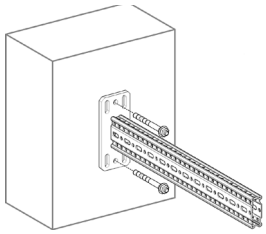

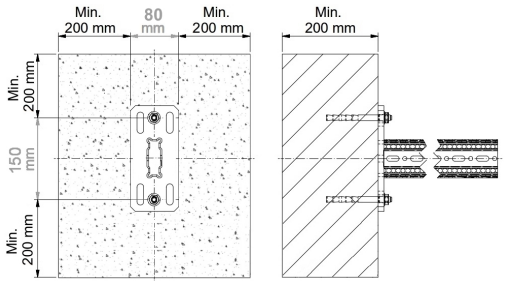

Distributed Load

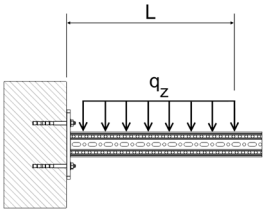

L_{max}	$q_{z, perm}$	F_z ($q_{z, perm}$ * L)
[mm]	[kN]	[kN]
200	**14,11**	**2,82**
400	**7,06**	**2,82**
600	**4,24**	**2,54**
800	**2,83**	**2,26**

q_z [kN/m] as permanent load over L.

Point Load

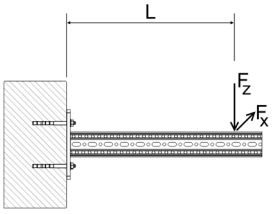

L_{max}	$F_{z, perm}$ for	
	$F_x = 0$	$F_x = \mu_0 * F_z$
[mm]	[kN]	[kN]
200	**2,82**	**1,31**
400	**2,26**	**0,64**
600	**1,59**	**0,41**
800	**1,09**	**0,30**

F_z [kN] as a permanent load at distance L. F_x [kN] as a variable load at distance L.

2 Point Loads

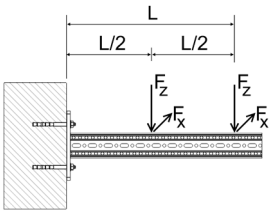

L_{max}	$F_{z, perm}$ for	
	$F_x = 0$	$F_x = \mu_0 * F_z$
[mm]	[kN]	[kN]
200	**1,41**	**1,24**
400	**1,27**	**0,95**
600	**1,07**	**0,63**
800	**0,76**	**0,47**

F_z [kN] as permanent loads at distance L and L/2, F_x [kN] as variable loads at distance L and L/2,

3 Point Loads

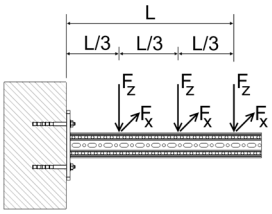

L_{max}	$F_{z, perm}$ for	
	$F_x = 0$	$F_x = \mu_0 * F_z$
[mm]	[kN]	[kN]
200	**0,94**	**0,82**
400	**0,88**	**0,71**
600	**0,75**	**0,47**
800	**0,58**	**0,36**

F_z [kN] as permanent loads at distance L, 2*L/3 and L/3, F_x [kN] as variable loads at distance L, 2*L/3 and L/3,

Friction coefficient μ_0 = 0,2 for friction in longitudinal direction. Max. deviation L/100.
Max. permissible anchor loads according to EN 1992-4; Material: Steel galvanised. Cracked concrete C20/25 f_{ck} = 20 N/mm.
Min. component thickness and edge distances to be respected.

Working loads in accordance with Eurocode 3

Beam Section TP F 80

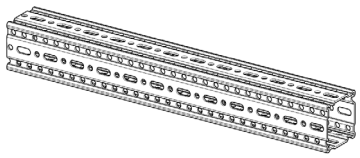

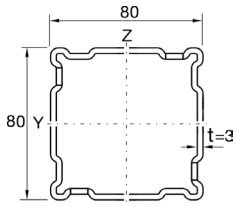

Single-span beam with uniaxial bending

Distributed Load

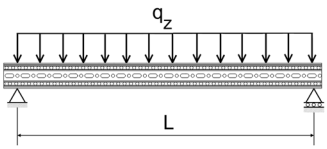

L_{max}	$q_{z,\ perm}$	F_z ($q_{z,\ perm}$ * L)
[mm]	[kN/m]	[kN]
1000	**24,13**	**24,13**
1500	**10,69**	**16,03**
2000	**5,98**	**11,97**
2500	**3,11**	**7,78**
3000	**1,78**	**5,33**
3500	**1,09**	**3,83**

q_z [kN/m] as permanent load over L.

Point Load

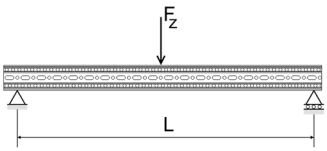

L_{max}	$F_{z,\ perm}$
[mm]	[kN]
1000	**12,06**
1500	**8,02**
2000	**5,98**
2500	**4,76**
3000	**3,33**
3500	**2,39**

F_z [kN] as a permanent load at L/2.

2 Point Loads

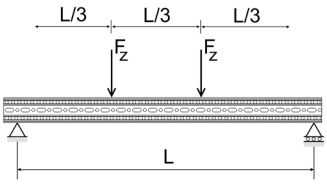

L_{max}	$F_{z,\ perm}$
[mm]	[kN]
1000	**9,05**
1500	**6,01**
2000	**4,49**
2500	**2,86**
3000	**1,95**
3500	**1,41**

F_z [kN] as permanent loads at L/3 and 2*L/3.

3 Point Loads

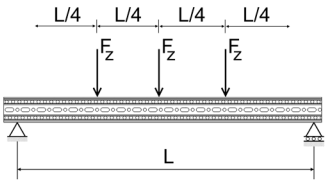

L_{max}	$F_{z,\ perm}$
[mm]	[kN]
1000	**6,03**
1500	**4,01**
2000	**2,99**
2500	**2,05**
3000	**1,40**
3500	**1,01**

F_z [kN] as permanent loads at L/4. L/2 and 3*L/4.

Max. bending L/200.
Dead weight of the profile is considered.

03/2026

Working loads in accordance with Eurocode 3

L-Construction F 80 / AK

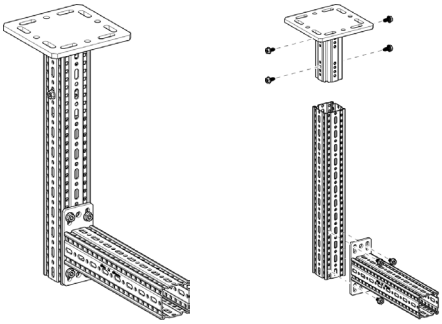

Part List
1 x End Support WBD-4KT 80/120-F 80
1 x Beam Section TP F 80
1 x Cantilever Bracket AK F 80
8 x Self-Forming-Screw FLS F

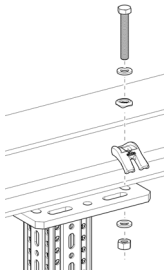

Note:
Unless otherwise stated, the information is based on installation using the Assembly Set MS 5P M12 S. If fixings are done using anchors, these must be verified separately.

Distributed Load

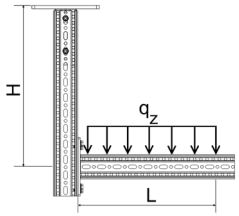

H_{max} \ L_{max}	300		500		700	
	$q_{z.\,perm}$	F_z (q_z * L)	$q_{z.\,perm}$	F_z (q_z * L)	$q_{z.\,perm}$	F_z (q_z * L)
[mm]	[kN/m]	[kN]	[kN/m]	[kN]	[kN/m]	[kN]
500	**10,64**	**3,19**	**4,17**	**2,08**	**2,16**	**1,51**
1000	**8,36**	**2,51**	**3,30**	**1,65**	**1,72**	**1,21**
1500	**6,88**	**2,06**	**2,73**	**1,37**	**1,43**	**1,00**
2000	**5,85**	**1,75**	**2,33**	**1,16**	**1,22**	**0,85**

q_z [kN/m] as permanent load over L.

Point Load

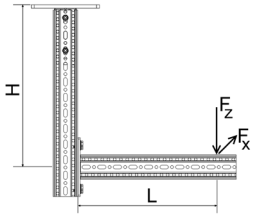

H_{max} \ L_{max}	300		500		700	
	$F_{z.\,perm}$ for		$F_{z.\,perm}$ for		$F_{z.\,perm}$ for	
	$F_x = 0$	$F_x = \mu_0 * F_z$	$F_x = 0$	$F_x = \mu_0 * F_z$	$F_x = 0$	$F_x = \mu_0 * F_z$
[mm]	[kN]	[kN]	[kN]	[kN]	[kN]	[kN]
500	**1,74**	**1,74**	**1,08**	**1,08**	**0,77**	**0,77**
1000	**1,38**	**1,38**	**0,87**	**0,87**	**0,62**	**0,62**
1500	**1,14**	**1,14**	**0,72**	**0,72**	**0,51**	**0,51**
2000	**0,97**	**0,97**	**0,62**	**0,62**	**0,44**	**0,44**

F_z [kN] as a permanent load at distance L. F_x [kN] as a variable load at distance L.

2 Point Loads

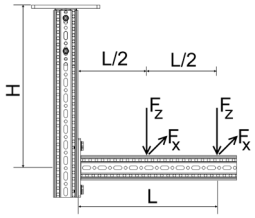

H_{max} \ L_{max}	300		500		700	
	$F_{z.\,perm}$ for		$F_{z.\,perm}$ for		$F_{z.\,perm}$ for	
	$F_x = 0$	$F_x = \mu_0 * F_z$	$F_x = 0$	$F_x = \mu_0 * F_z$	$F_x = 0$	$F_x = \mu_0 * F_z$
[mm]	[kN]	[kN]	[kN]	[kN]	[kN]	[kN]
500	**1,14**	**1,14**	**0,72**	**0,72**	**0,51**	**0,51**
1000	**0,90**	**0,90**	**0,57**	**0,57**	**0,41**	**0,41**
1500	**0,74**	**0,74**	**0,47**	**0,47**	**0,34**	**0,34**
2000	**0,63**	**0,63**	**0,41**	**0,41**	**0,29**	**0,29**

F_z [kN] as permanent loads at distance L and L/2. F_x [kN] as variable loads at distance L and L/2.

3 Point Loads

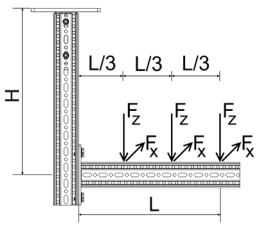

H_{max} \ L_{max}	300		500		700	
	$F_{z.\,perm}$ for		$F_{z.\,perm}$ for		$F_{z.\,perm}$ for	
	$F_x = 0$	$F_x = \mu_0 * F_z$	$F_x = 0$	$F_x = \mu_0 * F_z$	$F_x = 0$	$F_x = \mu_0 * F_z$
[mm]	[kN]	[kN]	[kN]	[kN]	[kN]	[kN]
500	**0,83**	**0,83**	**0,53**	**0,53**	**0,38**	**0,38**
1000	**0,66**	**0,66**	**0,42**	**0,42**	**0,30**	**0,30**
1500	**0,54**	**0,54**	**0,35**	**0,35**	**0,25**	**0,25**
2000	**0,46**	**0,46**	**0,30**	**0,30**	**0,22**	**0,22**

F_z [kN] as permanent loads at distance L. 2*L/3 and L/3. F_x [kN] as variable loads at distance L. 2*L/3 and L/3.

All illustrated structures are able to be installed standing as well.
Friction coefficient μ_0 = 0,2 for friction in longitudinal direction. Max. deviation H/100; L/100.

Working loads in accordance with Eurocode 3

L-Construction F 80 / AK-E

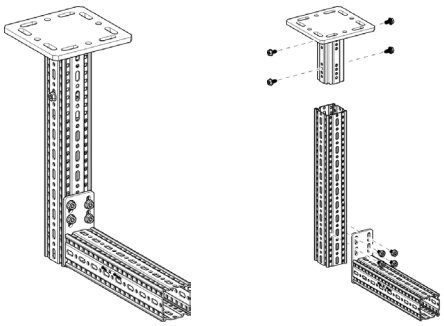

Part List
1 x End Support WBD-4KT 80/120-F 80
1 x Beam Section TP F 80
1 x Cantilever Bracket AK F 80-E
8 x Self-Forming-Screw FLS F

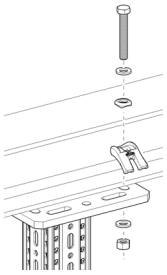

Note:
Unless otherwise stated, the information is based on installation using the Assembly Set MS 5P M12 S. If fixings are done using anchors, these must be verified separately.

Distributed Load

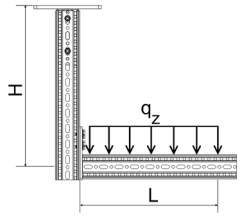

H_{max} \ L_{max}	300		500		700	
	$q_{z.\,perm}$	F_z (q_z * L)	$q_{z.\,perm}$	F_z (q_z * L)	$q_{z.\,perm}$	F_z (q_z * L)
[mm]	[kN/m]	[kN]	[kN/m]	[kN]	[kN/m]	[kN]
500	**20,35**	**4,07**	**6,06**	**2,42**	**2,80**	**1,68**
1000	**15,98**	**3,20**	**4,83**	**1,93**	**2,25**	**1,35**
1500	**13,15**	**2,63**	**4,01**	**1,61**	**1,87**	**1,12**
2000	**11,17**	**2,23**	**3,43**	**1,37**	**1,60**	**0,96**

q_z [kN/m] as permanent load over L.

Point Load

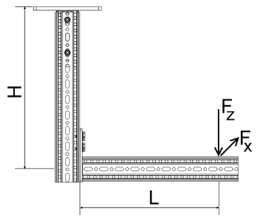

H_{max} \ L_{max}	300		500		700	
	$F_{z.\,perm}$ for		$F_{z.\,perm}$ for		$F_{z.\,perm}$ for	
	$F_x = 0$	$F_x = \mu_0 * F_z$	$F_x = 0$	$F_x = \mu_0 * F_z$	$F_x = 0$	$F_x = \mu_0 * F_z$
[mm]	[kN]	[kN]	[kN]	[kN]	[kN]	[kN]
500	**2,33**	**2,33**	**1,28**	**1,28**	**0,86**	**0,86**
1000	**1,85**	**1,85**	**1,03**	**1,03**	**0,70**	**0,70**
1500	**1,53**	**1,53**	**0,86**	**0,86**	**0,58**	**0,58**
2000	**1,31**	**1,31**	**0,74**	**0,74**	**0,50**	**0,50**

F_z [kN] as a permanent load at distance L. F_x [kN] as a variable load at distance L.

2 Point Loads

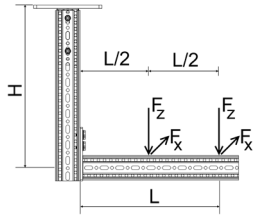

H_{max} \ L_{max}	300		500		700	
	$F_{z.\,perm}$ for		$F_{z.\,perm}$ for		$F_{z.\,perm}$ for	
	$F_x = 0$	$F_x = \mu_0 * F_z$	$F_x = 0$	$F_x = \mu_0 * F_z$	$F_x = 0$	$F_x = \mu_0 * F_z$
[mm]	[kN]	[kN]	[kN]	[kN]	[kN]	[kN]
500	**1,50**	**1,50**	**0,85**	**0,85**	**0,57**	**0,57**
1000	**1,19**	**1,19**	**0,68**	**0,68**	**0,46**	**0,46**
1500	**0,98**	**0,98**	**0,56**	**0,56**	**0,39**	**0,39**
2000	**0,83**	**0,83**	**0,48**	**0,48**	**0,33**	**0,33**

F_z [kN] as permanent loads at distance L and L/2. F_x [kN] as variable loads at distance L and L/2.

3 Point Loads

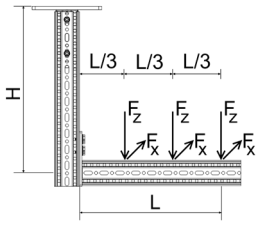

H_{max} \ L_{max}	300		500		700	
	$F_{z.\,perm}$ for		$F_{z.\,perm}$ for		$F_{z.\,perm}$ for	
	$F_x = 0$	$F_x = \mu_0 * F_z$	$F_x = 0$	$F_x = \mu_0 * F_z$	$F_x = 0$	$F_x = \mu_0 * F_z$
[mm]	[kN]	[kN]	[kN]	[kN]	[kN]	[kN]
500	**1,09**	**1,09**	**0,62**	**0,62**	**0,42**	**0,42**
1000	**0,86**	**0,86**	**0,50**	**0,50**	**0,34**	**0,34**
1500	**0,71**	**0,71**	**0,41**	**0,41**	**0,29**	**0,29**
2000	**0,61**	**0,61**	**0,36**	**0,36**	**0,24**	**0,24**

F_z [kN] as permanent loads at distance L. 2*L/3 and L/3. F_x [kN] as variable loads at distance L. 2*L/3 and L/3.

Friction coefficient μ_0 = 0,2 for friction in longitudinal direction. Max. deviation H/100; L/100.

03/2026

Working loads in accordance with Eurocode 3

T-Support F 80 / STA

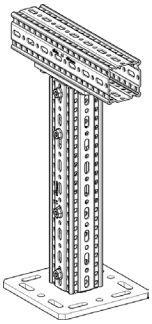

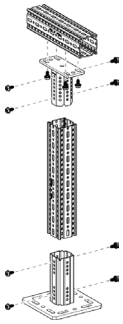

Part List
1 x End Support WBD-4KT 80/120-F 80
2 x Beam Section TP F 80
1 x End Support STA F 80
12 x Self-Forming-Screw FLS F

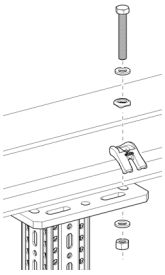

Note:
Unless otherwise stated, the information is based on installation using the Assembly Set MS 5P M12 S. If fixings are done using anchors, these must be verified separately.

Distributed Load - symmetrical

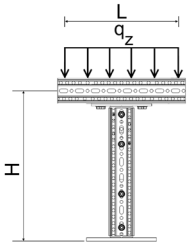

L_{max}	H_{max} = 2 m	
	$q_{z,\ perm}$	F_z ($q_{z,\ perm}$ x L)
[mm]	[kN/m]	[kN]
500	**22,07**	**11,04**
750	**12,31**	**9,23**
1000	**7,82**	**7,82**
1250	**5,42**	**6,78**

q_z [kN/m] as permanent load over L.

Point Load - centrical

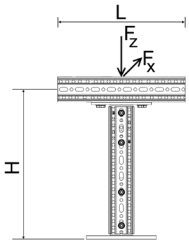

H_{max}	L_{max} = 1 m $F_{z,\ perm}$ for	
	$F_x = 0$	$F_x = \mu_0 * F_z$
[mm]	[kN]	[kN]
500	**12,13**	**7,25**
1000	**12,06**	**3,13**
1500	**11,98**	**1,83**
2000	**11,91**	**1,23**

F_z [kN] as a permanent load F_x [kN] as a variable load;
central load introduction for planned eccentricity ± 30 mm.

2 Point Loads

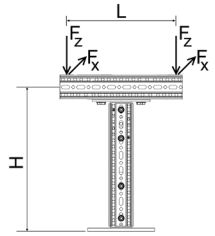

H_{max} \ L_{max}	500 $F_{z,\ perm}$ for		750 $F_{z,\ perm}$ for		1000 $F_{z,\ perm}$ for	
	$F_x = 0$	$F_x = \mu_0 * F_z$	$F_x = 0$	$F_x = \mu_0 * F_z$	$F_x = 0$	$F_x = \mu_0 * F_z$
[mm]	[kN]	[kN]	[kN]	[kN]	[kN]	[kN]
500	**3,93**	**3,06**	**3,02**	**2,44**	**2,45**	**2,02**
1000	**3,93**	**1,56**	**3,02**	**1,56**	**2,45**	**1,56**
1500	**3,93**	**0,92**	**3,02**	**0,92**	**2,45**	**0,92**
2000	**3,93**	**0,61**	**3,02**	**0,61**	**2,45**	**0,61**

F_z [kN] as permanent loads at distance L. F_x [kN] as variable loads at distance L.

3 Point Loads

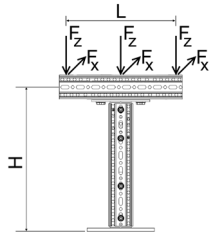

H_{max} \ L_{max}	500 $F_{z,\ perm}$ for		750 $F_{z,\ perm}$ for		1000 $F_{z,\ perm}$ for	
	$F_x = 0$	$F_x = \mu_0 * F_z$	$F_x = 0$	$F_x = \mu_0 * F_z$	$F_x = 0$	$F_x = \mu_0 * F_z$
[mm]	[kN]	[kN]	[kN]	[kN]	[kN]	[kN]
500	**3,27**	**2,42**	**2,61**	**1,86**	**2,17**	**1,52**
1000	**3,27**	**1,04**	**2,61**	**1,04**	**2,17**	**1,04**
1500	**3,27**	**0,61**	**2,61**	**0,61**	**2,17**	**0,61**
2000	**3,27**	**0,41**	**2,61**	**0,41**	**2,17**	**0,41**

F_z [kN] as permanent loads at distance L and L/2. F_x [kN] as variable loads at distance L and L/2.

All illustrated structures are able to be installed standing as well.
Friction coefficient μ_0 = 0,2 for friction in longitudinal direction. Max. Deviation H/150.

Working loads in accordance with Eurocode 3

T-Support F 80 / WD

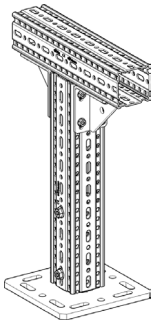

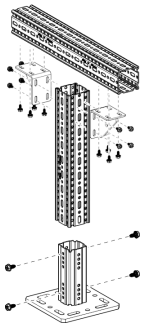

Part List
1 x End Support WBD-4KT 80/120-F 80
2 x Beam Section TP F 80
2 x Corner Bracket WD F 80
20 x Self-Forming-Screw FLS F

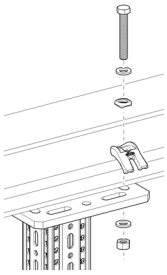

Note:
Unless otherwise stated, the information is based on installation using the Assembly Set MS 5P M12 S. If fixings are done using anchors, these must be verified separately.

Distributed Load - symmetrical

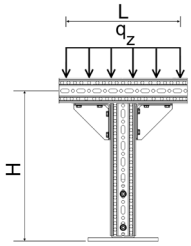

L_{max}	H_{max} = 2 m	
	$q_{z.\ perm}$	F_z ($q_{z.\ perm}$ x L)
[mm]	[kN/m]	[kN]
500	**23,63**	**11,82**
750	**19,09**	**14,32**
1000	**13,54**	**13,54**
1250	**9,40**	**11,75**

q_z [kN/m] as permanent load over L.

Point Load - centrical

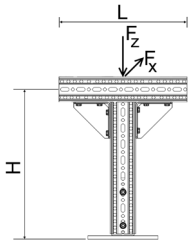

H_{max}	L_{max} = 1 m	
	$F_{z.\ perm}$ for	
	$F_x = 0$	$F_x = \mu_0 * F_z$
[mm]	[kN]	[kN]
500	**14,37**	**7,25**
1000	**14,37**	**3,13**
1500	**14,37**	**1,83**
2000	**14,37**	**1,23**

F_z [kN] as a permanent load F_x [kN] as a variable load;
central load introduction for planned eccentricity ± 30 mm.

2 Point Loads

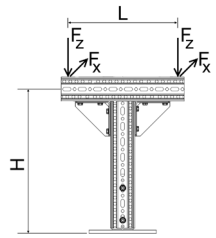

H_{max} \ L_{max}	500		750		1000	
	$F_{z.\ perm}$ for		$F_{z.\ perm}$ for		$F_{z.\ perm}$ for	
	$F_x = 0$	$F_x = \mu_0 * F_z$	$F_x = 0$	$F_x = \mu_0 * F_z$	$F_x = 0$	$F_x = \mu_0 * F_z$
[mm]	[kN]	[kN]	[kN]	[kN]	[kN]	[kN]
500	**6,02**	**3,62**	**5,21**	**3,29**	**4,23**	**2,84**
1000	**5,94**	**1,56**	**5,21**	**1,56**	**4,23**	**1,56**
1500	**5,87**	**0,92**	**5,21**	**0,92**	**4,23**	**0,92**
2000	**5,80**	**0,61**	**5,21**	**0,61**	**4,23**	**0,61**

F_z [kN] as permanent loads at distance L. F_x [kN] as variable loads at distance L.

3 Point Loads

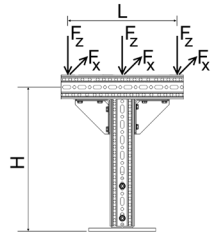

H_{max} \ L_{max}	500		750		1000	
	$F_{z.\ perm}$ for		$F_{z.\ perm}$ for		$F_{z.\ perm}$ for	
	$F_x = 0$	$F_x = \mu_0 * F_z$	$F_x = 0$	$F_x = \mu_0 * F_z$	$F_x = 0$	$F_x = \mu_0 * F_z$
[mm]	[kN]	[kN]	[kN]	[kN]	[kN]	[kN]
500	**4,08**	**2,42**	**4,02**	**2,42**	**3,42**	**2,31**
1000	**4,03**	**1,04**	**4,02**	**1,04**	**3,42**	**1,04**
1500	**3,98**	**0,61**	**3,98**	**0,61**	**3,42**	**0,61**
2000	**3,93**	**0,41**	**3,84**	**0,41**	**3,42**	**0,41**

F_z [kN] as permanent loads at distance L and L/2. F_x [kN] as variable loads at distance L and L/2.

All illustrated structures are able to be installed standing as well.
Friction coefficient μ_0 = 0,2 for friction in longitudinal direction. Max. Deviation H/150.

03/2026

Working loads in accordance with Eurocode 3

Frame F 80 / STA

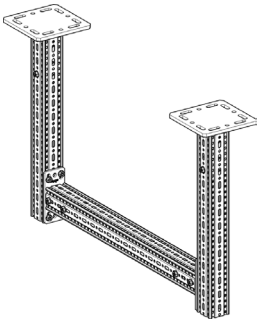

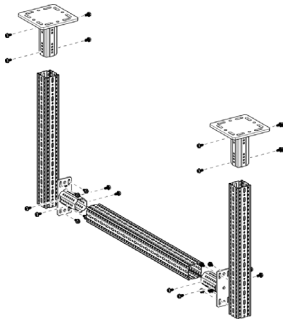

Part List
2 x End Support WBD-4KT 80/120-F 80
3 x Beam Section TP F 80
2 x End Support STA F 80
24 x Self-Forming-Screw FLS

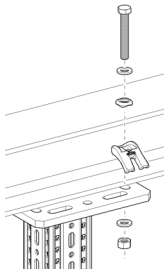

Note:
Unless otherwise stated, the information is based on installation using the Assembly Set MS 5P M12 S. If fixings are done using anchors, these must be verified separately.

Distributed Load

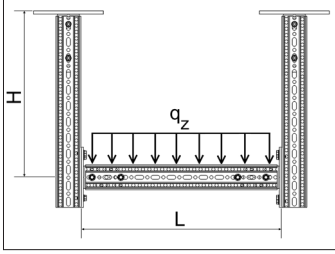

H_{max} \ L_{max}	500		1000		1500		2000		2500		3000	
	$q_{z.\,perm}$	F_z (q_z * L)	$q_{z.\,perm}$	F_z (q_z * L)	$q_{z.\,perm}$	F_z (q_z * L)	$q_{z.\,perm}$	F_z (q_z * L)	$q_{z.\,perm}$	F_z (q_z * L)	$q_{z.\,perm}$	F_z (q_z * L)
[mm]	[kN/m]	[kN]	[kN/m]	[kN]	[kN/m]	[kN]	[kN/m]	[kN]	[kN/m]	[kN]	[kN/m]	[kN]
1000	**47,53**	**23,76**	**23,75**	**23,75**	**11,63**	**17,44**	**6,17**	**12,34**	**3,59**	**8,98**	**2,26**	**6,79**
1500	**46,97**	**23,49**	**23,36**	**23,36**	**11,43**	**17,15**	**6,08**	**12,16**	**3,54**	**8,85**	**2,23**	**6,69**
2000	**46,49**	**23,24**	**23,17**	**23,17**	**11,24**	**16,86**	**5,99**	**11,98**	**3,49**	**8,72**	**2,20**	**6,60**
2500	**45,00**	**22,50**	**22,09**	**22,09**	**11,06**	**16,59**	**5,90**	**11,80**	**3,44**	**8,60**	**2,14**	**6,42**
3000	**41,39**	**20,69**	**20,67**	**20,67**	**10,50**	**15,76**	**5,80**	**11,61**	**3,40**	**8,49**	**2,17**	**6,51**

q_z [kN/m] as permanent load over L.

Point Load

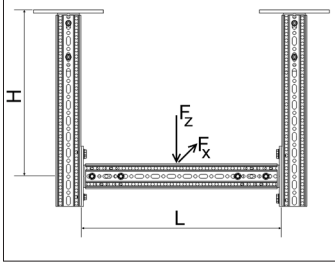

H_{max} \ L_{max}	500		1000		1500		2000		2500		3000	
	$F_{z.\,perm}$ for		$F_{z.\,perm}$ for		$F_{z.\,perm}$ for		$F_{z.\,perm}$ for		$F_{z.\,perm}$ for		$F_{z.\,perm}$ for	
	$F_x = 0$	$F_x = \mu_0 * F_z$	$F_x = 0$	$F_x = \mu_0 * F_z$	$F_x = 0$	$F_x = \mu_0 * F_z$	$F_x = 0$	$F_x = \mu_0 * F_z$	$F_x = 0$	$F_x = \mu_0 * F_z$	$F_x = 0$	$F_x = \mu_0 * F_z$
[mm]	[kN]	[kN]	[kN]	[kN]	[kN]	kN]	[kN]	[kN]	[kN]	[kN]	[kN]	[kN]
1000	**17,84**	**9,78**	**12,91**	**9,77**	**8,91**	**6,74**	**6,88**	**5,20**	**5,54**	**4,23**	**4,16**	**3,60**
1500	**17,39**	**5,72**	**12,85**	**5,64**	**8,87**	**5,45**	**6,85**	**5,15**	**5,48**	**4,21**	**4,11**	**3,58**
2000	**16,91**	**3,86**	**12,79**	**3,83**	**8,82**	**3,77**	**6,82**	**3,65**	**5,41**	**3,49**	**4,06**	**3,28**
2500	**16,49**	**2,80**	**12,73**	**2,79**	**8,78**	**2,76**	**6,78**	**2,71**	**5,35**	**2,64**	**4,01**	**2,54**
3000	**15,97**	**2,14**	**12,65**	**2,13**	**8,73**	**2,12**	**6,74**	**2,09**	**5,29**	**2,05**	**3,97**	**2,00**

F_z [kN] as a permanent load at distance L/2. F_x [kN] as a variable load at distance L/2.

2 Point Loads

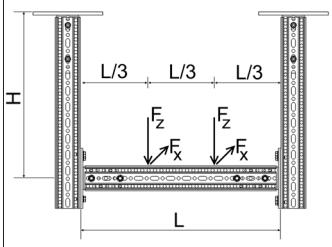

H_{max} \ L_{max}	500		1000		1500		2000		2500		3000	
	$F_{z.\,perm}$ for		$F_{z.\,perm}$ for		$F_{z.\,perm}$ for		$F_{z.\,perm}$ for		$F_{z.\,perm}$ for		$F_{z.\,perm}$ for	
	$F_x = 0$	$F_x = \mu_0 * F_z$	$F_x = 0$	$F_x = \mu_0 * F_z$	$F_x = 0$	$F_x = \mu_0 * F_z$	$F_x = 0$	$F_x = \mu_0 * F_z$	$F_x = 0$	$F_x = \mu_0 * F_z$	$F_x = 0$	$F_x = \mu_0 * F_z$
[mm]	[kN]	[kN]	[kN]	[kN]	[kN]	kN]	[kN]	[kN]	[kN]	[kN]	[kN]	[kN]
1000	**10,05**	**4,79**	**9,78**	**4,65**	**6,77**	**4,34**	**4,67**	**3,89**	**3,34**	**3,14**	**2,51**	**2,36**
1500	**9,87**	**2,93**	**9,64**	**2,83**	**6,67**	**2,75**	**4,61**	**2,62**	**3,30**	**2,43**	**2,48**	**2,21**
2000	**9,60**	**1,93**	**9,56**	**1,92**	**6,57**	**1,89**	**4,55**	**1,84**	**3,26**	**1,77**	**2,45**	**1,68**
2500	**9,16**	**1,40**	**9,16**	**1,40**	**6,48**	**1,39**	**4,49**	**1,36**	**3,21**	**1,33**	**2,42**	**1,29**
3000	**8,88**	**1,07**	**8,80**	**1,07**	**6,20**	**1,06**	**4,30**	**1,05**	**3,16**	**1,03**	**2,41**	**1,01**

F_z [kN] as permanent loads at distance 2*L/3 and L/3. F_x [kN] as variable loads at distance 2*L/3 and L/3.

3 Point Loads

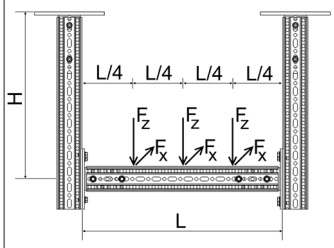

H_{max} \ L_{max}	500		1000		1500		2000		2500		3000	
	$F_{z.\,perm}$ for		$F_{z.\,perm}$ for		$F_{z.\,perm}$ for		$F_{z.\,perm}$ for		$F_{z.\,perm}$ for		$F_{z.\,perm}$ for	
	$F_x = 0$	$F_x = \mu_0 * F_z$	$F_x = 0$	$F_x = \mu_0 * F_z$	$F_x = 0$	$F_x = \mu_0 * F_z$	$F_x = 0$	$F_x = \mu_0 * F_z$	$F_x = 0$	$F_x = \mu_0 * F_z$	$F_x = 0$	$F_x = \mu_0 * F_z$
[mm]	[kN]	[kN]	[kN]	[kN]	[kN]	kN]	[kN]	[kN]	[kN]	[kN]	[kN]	[kN]
1000	**6,72**	**3,20**	**6,55**	**3,10**	**4,56**	**2,91**	**3,31**	**2,63**	**2,38**	**2,20**	**1,80**	**1,69**
1500	**6,54**	**1,91**	**6,51**	**1,89**	**4,54**	**1,84**	**3,27**	**1,76**	**2,35**	**1,64**	**1,78**	**1,50**
2000	**6,40**	**1,29**	**6,35**	**1,28**	**4,51**	**1,26**	**3,22**	**1,23**	**2,32**	**1,19**	**1,75**	**1,13**
2500	**6,33**	**0,94**	**6,29**	**0,93**	**4,47**	**0,92**	**3,17**	**0,91**	**2,27**	**0,89**	**1,71**	**0,86**
3000	**6,20**	**0,71**	**6,18**	**0,71**	**4,44**	**0,71**	**3,13**	**0,70**	**2,25**	**0,69**	**1,69**	**0,68**

F_z [kN] as permanent loads at distance 3*L/4. L/2 and L/4. F_x [kN] as variable loads at distance 3*L/4. L/4 and L/4.

All illustrated structures are able to be installed standing as well.
Friction coefficient μ_0 = 0,2 for friction in longitudinal direction. Max. deviation H/100; L/200.

Working loads in accordance with Eurocode 3

Frame F 80 / STA-E

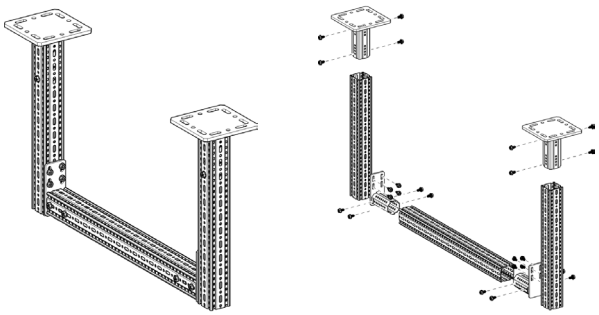

Part List
2 x End Support WBD-4KT 80/120-F 80
3 x Beam Section TP F 80
2 x End Support STA F 80-E
24 x Self-Forming-Screw FLS

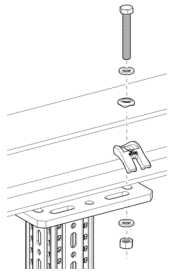

Note:
Unless otherwise stated, the information is based on installation using the Assembly Set MS 5P M12 S. If fixings are done using anchors, these must be verified separately.

Distributed Load

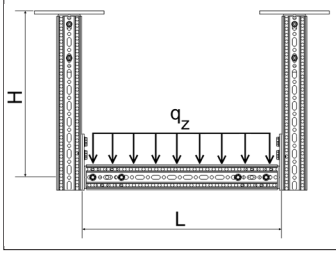

H_{max} \ L_{max}	500		1000		1500		2000		2500		3000	
	$q_{z,\,perm}$	F_z (q_z * L)	$q_{z,\,perm}$	F_z (q_z * L)	$q_{z,\,perm}$	F_z (q_z * L)	$q_{z,\,perm}$	F_z (q_z * L)	$q_{z,\,perm}$	F_z (q_z * L)	$q_{z,\,perm}$	F_z (q_z * L)
[mm]	[kN/m]	[kN]	[kN/m]	[kN]	[kN/m]	[kN]	[kN/m]	[kN]	[kN/m]	[kN]	[kN/m]	[kN]
1000	**41,98**	**20,99**	**23,02**	**23,02**	**12,05**	**18,07**	**6,05**	**12,09**	**3,50**	**8,74**	**2,19**	**6,57**
1500	**41,49**	**20,74**	**22,65**	**22,65**	**11,96**	**17,95**	**5,96**	**11,92**	**3,45**	**8,62**	**2,16**	**6,48**
2000	**41,06**	**20,53**	**22,47**	**22,47**	**11,87**	**17,80**	**5,87**	**11,74**	**3,40**	**8,49**	**2,13**	**6,39**
2500	**39,74**	**19,87**	**21,42**	**21,42**	**11,78**	**17,66**	**5,78**	**11,57**	**3,35**	**8,37**	**2,07**	**6,21**
3000	**37,08**	**18,54**	**20,67**	**20,67**	**11,77**	**17,66**	**5,69**	**11,37**	**3,31**	**8,26**	**2,10**	**6,30**

q_z [kN/m] as permanent load over L.

Point Load

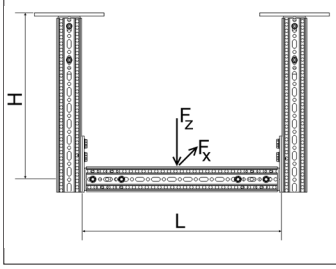

H_{max} \ L_{max}	500		1000		1500		2000		2500		3000	
	$F_{z,\,perm}$ for		$F_{z,\,perm}$ for		$F_{z,\,perm}$ for		$F_{z,\,perm}$ for		$F_{z,\,perm}$ for		$F_{z,\,perm}$ for	
	$F_x = 0$	$F_x = \mu_0 * F_z$	$F_x = 0$	$F_x = \mu_0 * F_z$	$F_x = 0$	$F_x = \mu_0 * F_z$	$F_x = 0$	$F_x = \mu_0 * F_z$	$F_x = 0$	$F_x = \mu_0 * F_z$	$F_x = 0$	$F_x = \mu_0 * F_z$
[mm]	[kN]	[kN]	[kN]	[kN]	[kN]	kN]	[kN]	[kN]	[kN]	[kN]	[kN]	[kN]
1000	**17,85**	**9,55**	**12,78**	**9,21**	**8,78**	**6,66**	**6,76**	**5,12**	**5,38**	**4,16**	**4,02**	**3,53**
1500	**17,40**	**5,72**	**12,74**	**5,64**	**8,75**	**5,45**	**6,74**	**5,10**	**5,33**	**4,14**	**3,98**	**3,51**
2000	**16,91**	**3,86**	**12,69**	**3,83**	**8,72**	**3,77**	**6,71**	**3,65**	**5,27**	**3,49**	**3,94**	**3,27**
2500	**16,50**	**2,80**	**12,64**	**2,79**	**8,68**	**2,76**	**6,68**	**2,71**	**5,22**	**2,64**	**3,90**	**2,54**
3000	**15,97**	**2,14**	**12,57**	**2,13**	**8,64**	**2,12**	**6,65**	**2,09**	**5,17**	**2,05**	**3,86**	**2,00**

F_z [kN] as a permanent load at distance L/2. F_x [kN] as a variable load at distance L/2.

2 Point Loads

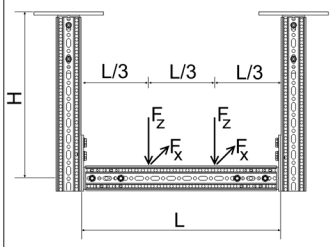

H_{max} \ L_{max}	500		1000		1500		2000		2500		3000	
	$F_{z,\,perm}$ for		$F_{z,\,perm}$ for		$F_{z,\,perm}$ for		$F_{z,\,perm}$ for		$F_{z,\,perm}$ for		$F_{z,\,perm}$ for	
	$F_x = 0$	$F_x = \mu_0 * F_z$	$F_x = 0$	$F_x = \mu_0 * F_z$	$F_x = 0$	$F_x = \mu_0 * F_z$	$F_x = 0$	$F_x = \mu_0 * F_z$	$F_x = 0$	$F_x = \mu_0 * F_z$	$F_x = 0$	$F_x = \mu_0 * F_z$
[mm]	[kN]	[kN]	[kN]	[kN]	[kN]	kN]	[kN]	[kN]	[kN]	[kN]	[kN]	[kN]
1000	**10,05**	**4,79**	**9,52**	**4,65**	**6,69**	**4,34**	**4,57**	**3,89**	**3,25**	**3,06**	**2,43**	**2,29**
1500	**9,88**	**2,93**	**9,38**	**2,83**	**6,59**	**2,75**	**4,51**	**2,62**	**3,21**	**2,43**	**2,40**	**2,21**
2000	**9,60**	**1,93**	**9,30**	**1,92**	**6,49**	**1,89**	**4,45**	**1,84**	**3,17**	**1,77**	**2,37**	**1,68**
2500	**9,16**	**1,40**	**8,91**	**1,40**	**6,39**	**1,39**	**4,40**	**1,36**	**3,13**	**1,33**	**2,34**	**1,29**
3000	**8,88**	**1,07**	**8,56**	**1,07**	**6,12**	**1,06**	**4,21**	**1,05**	**3,07**	**1,03**	**2,33**	**1,01**

F_z [kN] as permanent loads at distance 2*L/3 and L/3. F_x [kN] as variable loads at distance 2*L/3 and L/3.

3 Point Loads

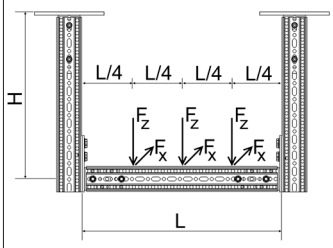

H_{max} \ L_{max}	500		1000		1500		2000		2500		3000	
	$F_{z,\,perm}$ for		$F_{z,\,perm}$ for		$F_{z,\,perm}$ for		$F_{z,\,perm}$ for		$F_{z,\,perm}$ for		$F_{z,\,perm}$ for	
	$F_x = 0$	$F_x = \mu_0 * F_z$	$F_x = 0$	$F_x = \mu_0 * F_z$	$F_x = 0$	$F_x = \mu_0 * F_z$	$F_x = 0$	$F_x = \mu_0 * F_z$	$F_x = 0$	$F_x = \mu_0 * F_z$	$F_x = 0$	$F_x = \mu_0 * F_z$
[mm]	[kN]	[kN]	[kN]	[kN]	[kN]	kN]	[kN]	[kN]	[kN]	[kN]	[kN]	[kN]
1000	**6,66**	**3,20**	**6,49**	**3,10**	**4,49**	**2,91**	**3,24**	**2,63**	**2,32**	**2,16**	**1,74**	**1,64**
1500	**6,48**	**1,91**	**6,45**	**1,89**	**4,47**	**1,84**	**3,20**	**1,76**	**2,29**	**1,64**	**1,72**	**1,50**
2000	**6,34**	**1,29**	**6,34**	**1,28**	**4,44**	**1,26**	**3,15**	**1,23**	**2,26**	**1,19**	**1,70**	**1,13**
2500	**6,27**	**0,94**	**6,27**	**0,93**	**4,40**	**0,92**	**3,10**	**0,91**	**2,21**	**0,89**	**1,66**	**0,86**
3000	**5,91**	**0,71**	**5,91**	**0,71**	**4,37**	**0,71**	**3,06**	**0,70**	**2,19**	**0,69**	**1,64**	**0,68**

F_z [kN] as permanent loads at distance 3*L/4. L/2 and L/4. F_x [kN] as variable loads at distance 3*L/4. L/4 and L/4.

Friction coefficient μ_0 = 0,2 for friction in longitudinal direction. Max. deviation H/100; L/200.

03/2026

Working loads in accordance with Eurocode 3

Frame F 80 / WD

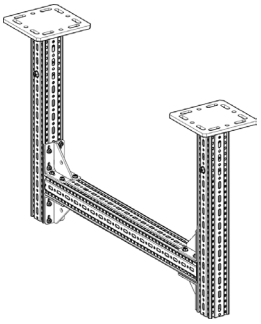

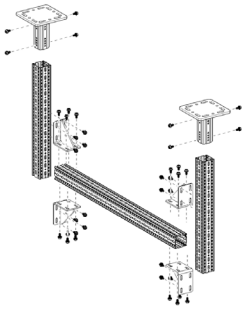

Part List
2 x End Support WBD-4KT 80/120-F 80
3 x Beam Section TP F 80
4 x Corner Bracket WD F 80
40 x Self-Forming-Screw FLS

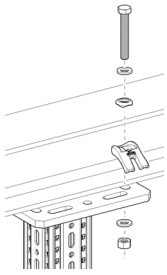

Note:
Unless otherwise stated, the information is based on installation using the Assembly Set MS 5P M12 S. If fixings are done using anchors, these must be verified separately.

Distributed Load

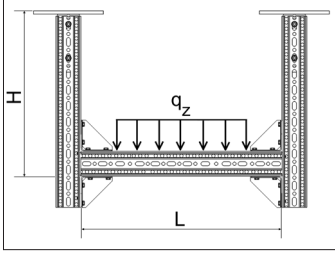

H_{max} \ L_{max}	500		1000		1500		2000		2500		3000	
	$q_{z.\,perm}$	F_z (q_z * L)	$q_{z.\,perm}$	F_z (q_z * L)	$q_{z.\,perm}$	F_z (q_z * L)	$q_{z.\,perm}$	F_z (q_z * L)	$q_{z.\,perm}$	F_z (q_z * L)	$q_{z.\,perm}$	F_z (q_z * L)
[mm]	[kN/m]	[kN]	[kN/m]	[kN]	[kN/m]	[kN]	[kN/m]	[kN]	[kN/m]	[kN]	[kN/m]	[kN]
1000	**80,32**	**20,88**	**28,47**	**21,64**	**13,95**	**17,57**	**7,63**	**13,43**	**4,60**	**10,40**	**2,99**	**8,25**
1500	**79,38**	**20,64**	**28,01**	**21,29**	**13,71**	**17,28**	**7,52**	**13,23**	**4,54**	**10,25**	**2,95**	**8,14**
2000	**78,56**	**20,43**	**27,78**	**21,11**	**13,48**	**16,99**	**7,41**	**13,03**	**4,47**	**10,10**	**2,90**	**8,02**
2500	**76,05**	**19,77**	**27,50**	**20,90**	**13,26**	**16,71**	**7,30**	**12,85**	**4,41**	**9,96**	**2,83**	**7,80**
3000	**70,94**	**18,44**	**27,20**	**20,67**	**12,60**	**15,87**	**7,18**	**12,63**	**4,35**	**9,83**	**2,86**	**7,91**

q_z [kN/m] as permanent load over L.

Point Load

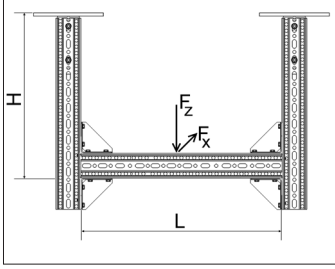

H_{max} \ L_{max}	500		1000		1500		2000		2500		3000	
	$F_{z.\,perm}$ for		$F_{z.\,perm}$ for		$F_{z.\,perm}$ for		$F_{z.\,perm}$ for		$F_{z.\,perm}$ for		$F_{z.\,perm}$ for	
	$F_x = 0$	$F_x = \mu_0 * F_z$	$F_x = 0$	$F_x = \mu_0 * F_z$	$F_x = 0$	$F_x = \mu_0 * F_z$	$F_x = 0$	$F_x = \mu_0 * F_z$	$F_x = 0$	$F_x = \mu_0 * F_z$	$F_x = 0$	$F_x = \mu_0 * F_z$
[mm]	[kN]	[kN]	[kN]	[kN]	[kN]	kN]	[kN]	[kN]	[kN]	[kN]	[kN]	[kN]
1000	**17,92**	**9,56**	**14,41**	**9,21**	**10,32**	**7,57**	**8,14**	**5,94**	**6,73**	**4,89**	**5,67**	**4,19**
1500	**17,42**	**5,72**	**14,11**	**5,64**	**10,09**	**5,45**	**7,97**	**5,15**	**6,59**	**4,74**	**5,42**	**4,11**
2000	**16,91**	**3,87**	**13,82**	**3,83**	**9,88**	**3,77**	**7,80**	**3,65**	**6,45**	**3,49**	**5,19**	**3,28**
2500	**16,49**	**2,80**	**13,58**	**2,79**	**9,69**	**2,76**	**7,64**	**2,71**	**6,32**	**2,64**	**5,00**	**2,54**
3000	**15,98**	**2,14**	**13,36**	**2,13**	**9,52**	**2,12**	**7,50**	**2,09**	**6,21**	**2,05**	**4,83**	**2,00**

F_z [kN] as a permanent load at distance L/2. F_x [kN] as a variable load at distance L/2.

2 Point Loads

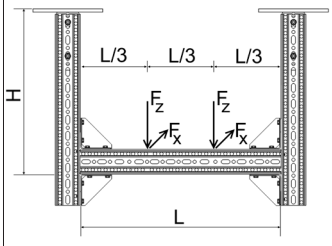

H_{max} \ L_{max}	500		1000		1500		2000		2500		3000	
	$F_{z.\,perm}$ for		$F_{z.\,perm}$ for		$F_{z.\,perm}$ for		$F_{z.\,perm}$ for		$F_{z.\,perm}$ for		$F_{z.\,perm}$ for	
	$F_x = 0$	$F_x = \mu_0 * F_z$	$F_x = 0$	$F_x = \mu_0 * F_z$	$F_x = 0$	$F_x = \mu_0 * F_z$	$F_x = 0$	$F_x = \mu_0 * F_z$	$F_x = 0$	$F_x = \mu_0 * F_z$	$F_x = 0$	$F_x = \mu_0 * F_z$
[mm]	[kN]	[kN]	[kN]	[kN]	[kN]	kN]	[kN]	[kN]	[kN]	[kN]	[kN]	[kN]
1000	**10,05**	**4,80**	**10,00**	**4,65**	**7,63**	**4,34**	**5,60**	**3,89**	**4,20**	**3,34**	**3,27**	**2,78**
1500	**9,88**	**2,93**	**9,86**	**2,83**	**7,52**	**2,75**	**5,53**	**2,62**	**4,15**	**2,44**	**3,23**	**2,21**
2000	**9,78**	**1,93**	**9,78**	**1,92**	**7,41**	**1,89**	**5,45**	**1,84**	**4,09**	**1,77**	**3,19**	**1,68**
2500	**9,37**	**1,40**	**9,37**	**1,40**	**7,30**	**1,39**	**5,38**	**1,36**	**4,04**	**1,33**	**3,14**	**1,29**
3000	**9,00**	**1,07**	**9,00**	**1,07**	**6,99**	**1,06**	**5,16**	**1,05**	**3,97**	**1,03**	**3,13**	**1,01**

F_z [kN] as permanent loads at distance 2*L/3 and L/3. F_x [kN] as variable loads at distance 2*L/3 and L/3.

3 Point Loads

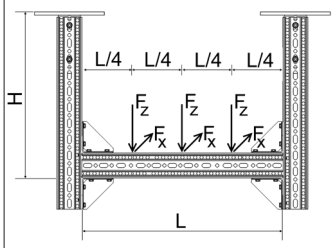

H_{max} \ L_{max}	500		1000		1500		2000		2500		3000	
	$F_{z.\,perm}$ for		$F_{z.\,perm}$ for		$F_{z.\,perm}$ for		$F_{z.\,perm}$ for		$F_{z.\,perm}$ for		$F_{z.\,perm}$ for	
	$F_x = 0$	$F_x = \mu_0 * F_z$	$F_x = 0$	$F_x = \mu_0 * F_z$	$F_x = 0$	$F_x = \mu_0 * F_z$	$F_x = 0$	$F_x = \mu_0 * F_z$	$F_x = 0$	$F_x = \mu_0 * F_z$	$F_x = 0$	$F_x = \mu_0 * F_z$
[mm]	[kN]	[kN]	[kN]	[kN]	[kN]	kN]	[kN]	[kN]	[kN]	[kN]	[kN]	[kN]
1000	**7,10**	**3,20**	**7,10**	**3,10**	**5,25**	**2,91**	**3,96**	**2,63**	**3,00**	**2,28**	**2,34**	**1,91**
1500	**6,97**	**1,91**	**6,97**	**1,89**	**5,23**	**1,84**	**3,91**	**1,76**	**2,96**	**1,64**	**2,31**	**1,50**
2000	**6,72**	**1,29**	**6,72**	**1,28**	**5,18**	**1,26**	**3,86**	**1,23**	**2,92**	**1,19**	**2,28**	**1,13**
2500	**6,67**	**0,94**	**6,66**	**0,93**	**5,09**	**0,92**	**3,79**	**0,91**	**2,86**	**0,89**	**2,23**	**0,86**
3000	**6,54**	**0,71**	**6,54**	**0,71**	**5,02**	**0,71**	**3,74**	**0,70**	**2,82**	**0,69**	**2,20**	**0,68**

F_z [kN] as permanent loads at distance 3*L/4. L/2 and L/4. F_x [kN] as variable loads at distance 3*L/4. L/4 and L/4.

All illustrated structures are able to be installed standing as well.
Friction coefficient μ_0 = 0,2 for friction in longitudinal direction. Max. deviation H/100; L/200.

Working loads in accordance with Eurocode 3

Joining Beam Bracket F 80 horizontal

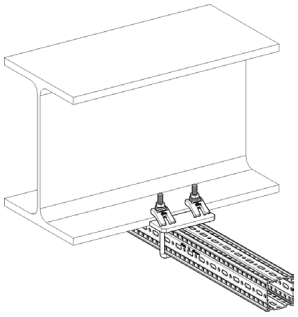

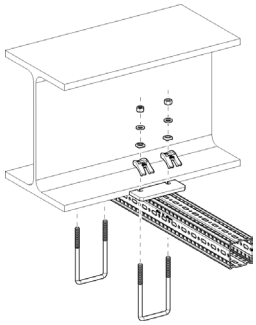

Part List
1 x Beam Section TP F 80
2 x U-Holder SB F 80-40

Distributed Load

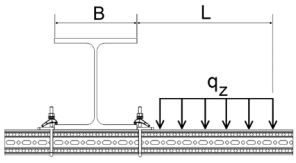

B_{max} \ L_{max}	300		500		700		900		1100	
	$q_{z.\,perm}$	F_z (q_z * L)	$q_{z.\,perm}$	F_z (q_z * L)	$q_{z.\,perm}$	F_z (q_z * L)	$q_{z.\,perm}$	F_z (q_z * L)	$q_{z.\,perm}$	F_z (q_z * L)
[mm]	[kN/m]	[kN]	[kN/m]	[kN]	[kN/m]	[kN]	[kN/m]	[kN]	[kN/m]	[kN]
100	**16,17**	**4,85**	**6,33**	**3,16**	**3,38**	**2,37**	**2,10**	**1,89**	**1,42**	**1,56**
150	**22,96**	**6,89**	**9,41**	**4,70**	**5,17**	**3,62**	**3,28**	**2,95**	**2,21**	**2,43**
200	**27,91**	**8,37**	**11,03**	**5,51**	**5,56**	**3,89**	**3,33**	**3,00**	**2,21**	**2,43**
250	**31,68**	**9,50**	**11,03**	**5,51**	**5,56**	**3,89**	**3,33**	**3,00**	**2,21**	**2,43**
300	**31,68**	**9,50**	**11,03**	**5,51**	**5,56**	**3,89**	**3,33**	**3,00**	**2,21**	**2,43**

q_z [kN/m] as permanent load over L.

Point Load

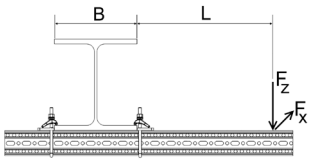

B_{max} \ L_{max}	300		500		700		900		1100	
	$F_{z.\,perm}$ for		$F_{z.\,perm}$ for		$F_{z.\,perm}$ for		$F_{z.\,perm}$ for		$F_{z.\,perm}$ for	
	$F_x = 0$	$F_x = \mu_0 * F_z$	$F_x = 0$	$F_x = \mu_0 * F_z$	$F_x = 0$	$F_x = \mu_0 * F_z$	$F_x = 0$	$F_x = \mu_0 * F_z$	$F_x = 0$	$F_x = \mu_0 * F_z$
[mm]	[kN]	[kN]	[kN]	[kN]	[kN]	[kN]	[kN]	[kN]	[kN]	[kN]
100	**2,65**	**1,26**	**1,74**	**0,83**	**1,29**	**0,61**	**1,03**	**0,49**	**0,85**	**0,40**
150	**3,95**	**1,87**	**2,70**	**1,28**	**1,94**	**0,97**	**1,51**	**0,78**	**1,23**	**0,66**
200	**4,53**	**2,36**	**2,72**	**1,67**	**1,94**	**1,29**	**1,51**	**1,05**	**1,23**	**0,89**
250	**4,53**	**2,76**	**2,72**	**2,01**	**1,94**	**1,58**	**1,51**	**1,24**	**1,23**	**1,01**
300	**4,53**	**3,09**	**2,72**	**2,23**	**1,94**	**1,59**	**1,51**	**1,24**	**1,23**	**1,01**

F_z [kN] as a permanent load at distance L. F_x [kN] as a variable load at distance L.

2 Point Loads

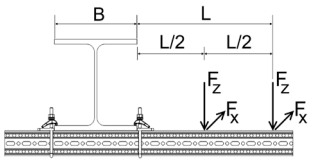

B_{max} \ L_{max}	300		500		700		900		1100	
	$F_{z.\,perm}$ for		$F_{z.\,perm}$ for		$F_{z.\,perm}$ for		$F_{z.\,perm}$ for		$F_{z.\,perm}$ for	
	$F_x = 0$	$F_x = \mu_0 * F_z$	$F_x = 0$	$F_x = \mu_0 * F_z$	$F_x = 0$	$F_x = \mu_0 * F_z$	$F_x = 0$	$F_x = \mu_0 * F_z$	$F_x = 0$	$F_x = \mu_0 * F_z$
[mm]	[kN]	[kN]	[kN]	[kN]	[kN]	[kN]	[kN]	[kN]	[kN]	[kN]
100	**1,64**	**0,78**	**1,10**	**0,53**	**0,83**	**0,40**	**0,66**	**0,32**	**0,55**	**0,26**
150	**2,38**	**1,13**	**1,68**	**0,80**	**1,29**	**0,62**	**1,00**	**0,50**	**0,82**	**0,42**
200	**2,94**	**1,40**	**1,81**	**1,02**	**1,29**	**0,81**	**1,00**	**0,66**	**0,82**	**0,56**
250	**3,02**	**1,60**	**1,81**	**1,21**	**1,29**	**0,97**	**1,00**	**0,81**	**0,82**	**0,69**
300	**3,02**	**1,77**	**1,81**	**1,37**	**1,29**	**1,11**	**1,00**	**0,94**	**0,82**	**0,67**

F_z [kN] as permanent loads at distance L and L/2. F_x [kN] as variable loads at distance L and L/2.

3 Point Loads

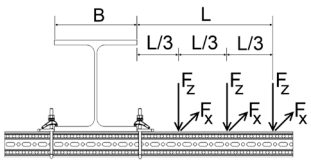

B_{max} \ L_{max}	300		500		700		900		1100	
	$F_{z.\,perm}$ for		$F_{z.\,perm}$ for		$F_{z.\,perm}$ for		$F_{z.\,perm}$ for		$F_{z.\,perm}$ for	
	$F_x = 0$	$F_x = \mu_0 * F_z$	$F_x = 0$	$F_x = \mu_0 * F_z$	$F_x = 0$	$F_x = \mu_0 * F_z$	$F_x = 0$	$F_x = \mu_0 * F_z$	$F_x = 0$	$F_x = \mu_0 * F_z$
[mm]	[kN]	[kN]	[kN]	[kN]	[kN]	[kN]	[kN]	[kN]	[kN]	[kN]
100	**1,19**	**0,57**	**0,81**	**0,39**	**0,61**	**0,29**	**0,49**	**0,24**	**0,41**	**0,20**
150	**1,70**	**0,81**	**1,22**	**0,58**	**0,95**	**0,45**	**0,75**	**0,37**	**0,61**	**0,31**
200	**2,09**	**0,99**	**1,36**	**0,74**	**0,97**	**0,59**	**0,75**	**0,49**	**0,61**	**0,42**
250	**2,26**	**1,13**	**1,36**	**0,87**	**0,97**	**0,70**	**0,75**	**0,59**	**0,61**	**0,51**
300	**2,26**	**1,24**	**1,36**	**0,97**	**0,97**	**0,80**	**0,75**	**0,62**	**0,61**	**0,51**

F_z [kN] as permanent loads at distance L. 2*L/3 and L/3. F_x [kN] as variable loads at distance L. 2*L/3 and L/3.

Friction coefficient μ_0 = 0,2 for friction in longitudinal direction. Max. deviation L/100.

03/2026

Working loads in accordance with Eurocode 3

Joining Beam Bracket F 80 vertical

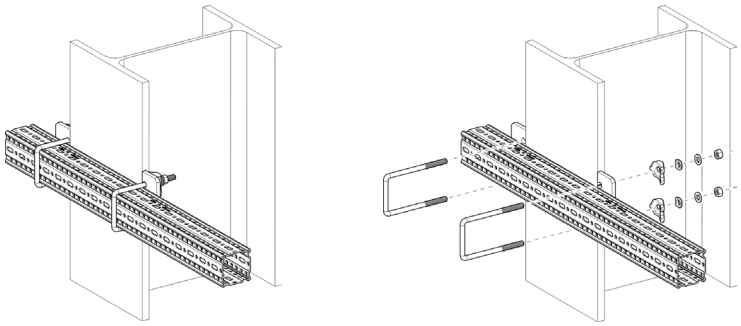

Part List
1 x Beam Section TP F 80
2 x U-Holder SB F 80-40

Distributed Load

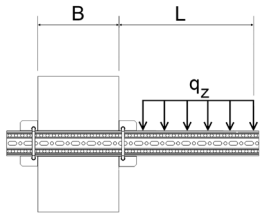

B_{max} \ L_{max}	300		500		700		900		1100	
	$q_{z.\,perm}$	F_z (q_z * L)	$q_{z.\,perm}$	F_z (q_z * L)	$q_{z.\,perm}$	F_z (q_z * L)	$q_{z.\,perm}$	F_z (q_z * L)	$q_{z.\,perm}$	F_z (q_z * L)
[mm]	[kN/m]	[kN]	[kN/m]	[kN]	[kN/m]	[kN]	[kN/m]	[kN]	[kN/m]	[kN]
100	**3,83**	**1,15**	**1,60**	**0,80**	**0,87**	**0,61**	**0,54**	**0,49**	**0,37**	**0,40**
150	**5,33**	**1,60**	**2,36**	**1,18**	**1,33**	**0,93**	**0,85**	**0,76**	**0,58**	**0,64**
200	**6,39**	**1,92**	**2,94**	**1,47**	**1,70**	**1,19**	**1,11**	**1,00**	**0,77**	**0,85**
250	**7,17**	**2,15**	**3,41**	**1,70**	**2,01**	**1,41**	**1,33**	**1,19**	**0,94**	**1,03**
300	**7,77**	**2,33**	**3,78**	**1,89**	**2,27**	**1,59**	**1,52**	**1,37**	**1,09**	**1,19**

q_z [kN/m] as permanent load over L.

Point Load

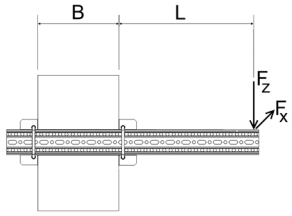

B_{max} \ L_{max}	300		500		700		900		1100	
	$F_{z.\,perm}$ for		$F_{z.\,perm}$ for		$F_{z.\,perm}$ for		$F_{z.\,perm}$ for		$F_{z.\,perm}$ for	
	$F_x = 0$	$F_x = \mu_0 * F_z$	$F_x = 0$	$F_x = \mu_0 * F_z$	$F_x = 0$	$F_x = \mu_0 * F_z$	$F_x = 0$	$F_x = \mu_0 * F_z$	$F_x = 0$	$F_x = \mu_0 * F_z$
[mm]	[kN]	[kN]	[kN]	[kN]	[kN]	[kN]	[kN]	[kN]	[kN]	[kN]
100	**0,70**	**0,67**	**0,46**	**0,44**	**0,34**	**0,32**	**0,27**	**0,25**	**0,22**	**0,21**
150	**1,05**	**1,01**	**0,72**	**0,69**	**0,54**	**0,52**	**0,43**	**0,41**	**0,36**	**0,34**
200	**1,33**	**1,27**	**0,94**	**0,90**	**0,72**	**0,69**	**0,58**	**0,56**	**0,49**	**0,47**
250	**1,55**	**1,48**	**1,12**	**1,08**	**0,88**	**0,84**	**0,72**	**0,69**	**0,61**	**0,58**
300	**1,74**	**1,66**	**1,29**	**1,24**	**1,02**	**0,98**	**0,85**	**0,81**	**0,72**	**0,69**

F_z [kN] as a permanent load at distance L. F_x [kN] as a variable load at distance L.

2 Point Loads

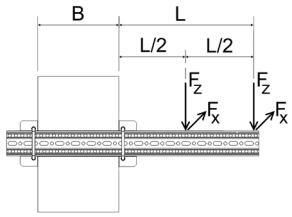

B_{max} \ L_{max}	300		500		700		900		1100	
	$F_{z.\,perm}$ for		$F_{z.\,perm}$ for		$F_{z.\,perm}$ for		$F_{z.\,perm}$ for		$F_{z.\,perm}$ for	
	$F_x = 0$	$F_x = \mu_0 * F_z$	$F_x = 0$	$F_x = \mu_0 * F_z$	$F_x = 0$	$F_x = \mu_0 * F_z$	$F_x = 0$	$F_x = \mu_0 * F_z$	$F_x = 0$	$F_x = \mu_0 * F_z$
[mm]	[kN]	[kN]	[kN]	[kN]	[kN]	[kN]	[kN]	[kN]	[kN]	[kN]
100	**0,44**	**0,42**	**0,29**	**0,28**	**0,22**	**0,21**	**0,17**	**0,16**	**0,14**	**0,13**
150	**0,63**	**0,61**	**0,45**	**0,43**	**0,34**	**0,33**	**0,28**	**0,26**	**0,23**	**0,22**
200	**0,78**	**0,75**	**0,57**	**0,55**	**0,45**	**0,43**	**0,37**	**0,35**	**0,31**	**0,30**
250	**0,90**	**0,86**	**0,68**	**0,65**	**0,54**	**0,52**	**0,45**	**0,43**	**0,38**	**0,37**
300	**0,99**	**0,95**	**0,77**	**0,73**	**0,62**	**0,60**	**0,52**	**0,50**	**0,45**	**0,43**

F_z [kN] as permanent loads at distance L and L/2. F_x [kN] as variable loads at distance L and L/2.

3 Point Loads

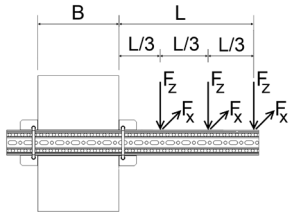

B_{max} \ L_{max}	300		500		700		900		1100	
	$F_{z.\,perm}$ for		$F_{z.\,perm}$ for		$F_{z.\,perm}$ for		$F_{z.\,perm}$ for		$F_{z.\,perm}$ for	
	$F_x = 0$	$F_x = \mu_0 * F_z$	$F_x = 0$	$F_x = \mu_0 * F_z$	$F_x = 0$	$F_x = \mu_0 * F_z$	$F_x = 0$	$F_x = \mu_0 * F_z$	$F_x = 0$	$F_x = \mu_0 * F_z$
[mm]	[kN]	[kN]	[kN]	[kN]	[kN]	[kN]	[kN]	[kN]	[kN]	[kN]
100	**0,32**	**0,30**	**0,21**	**0,21**	**0,16**	**0,15**	**0,13**	**0,12**	**0,10**	**0,10**
150	**0,45**	**0,43**	**0,32**	**0,31**	**0,25**	**0,24**	**0,20**	**0,19**	**0,17**	**0,16**
200	**0,56**	**0,53**	**0,41**	**0,39**	**0,33**	**0,31**	**0,27**	**0,26**	**0,23**	**0,22**
250	**0,63**	**0,61**	**0,48**	**0,46**	**0,39**	**0,37**	**0,33**	**0,31**	**0,28**	**0,27**
300	**0,70**	**0,67**	**0,55**	**0,52**	**0,45**	**0,43**	**0,38**	**0,36**	**0,33**	**0,31**

F_z [kN] as permanent loads at distance L. 2*L/3 and L/3. F_x [kN] as variable loads at distance L. 2*L/3 and L/3.

Friction coefficient $\mu_0 = 0{,}2$ for friction in longitudinal direction. Max. deviation L/100.

Working loads in accordance with Eurocode 3

Beam Bracket F 80 - Variant a) clamped

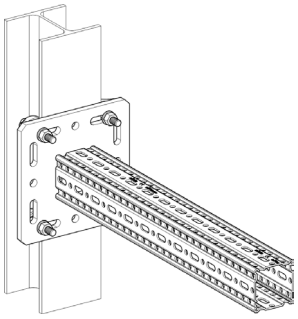

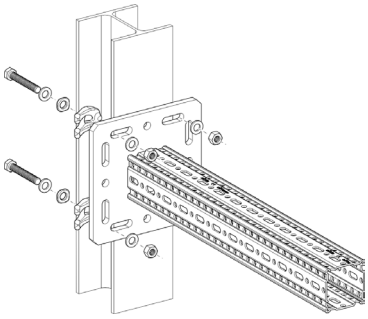

Part List
1 x Beam Bracket TKO F 80
1 x Assembly Set MS 5P M12 S

Distributed Load

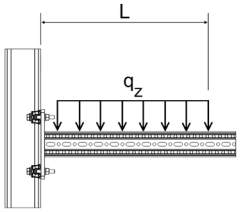

L_{max}	$q_{z.\ perm}$	F_z ($q_{z.\ perm}$ * L)
[mm]	[kN/m]	[kN]
300	**54,99**	**16,50**
500	**28,59**	**14,30**
700	**14,59**	**10,21**

q_z [kN/m] as permanent load over L.

Point Load

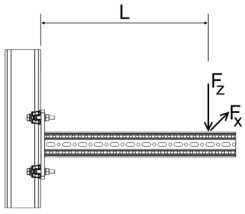

L_{max}	$F_{z.\ perm}$ for $F_x = 0$	$F_{z.\ perm}$ for $F_x = \mu_0 * F_z$
[mm]	[kN]	[kN]
300	**11,91**	**7,40**
500	**7,15**	**4,44**
700	**4,99**	**3,17**

F_z [kN] as a permanent load at distance L.
F_x [kN] as a variable load at distance L.

2 Point Loads

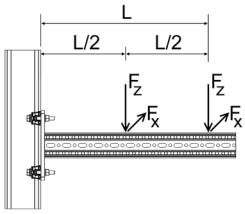

L_{max}	$F_{z.\ perm}$ for $F_x = 0$	$F_{z.\ perm}$ for $F_x = \mu_0 * F_z$
[mm]	[kN]	[kN]
300	**7,94**	**4,93**
500	**4,77**	**2,96**
700	**3,40**	**2,11**

F_z [kN] as permanent loads at distance L and L/2.
F_x [kN] as variable loads at distance L and L/2.

3 Point Loads

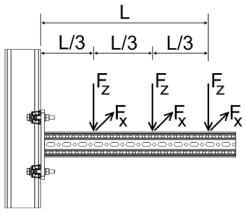

L_{max}	$F_{z.\ perm}$ for $F_x = 0$	$F_{z.\ perm}$ for $F_x = \mu_0 * F_z$
[mm]	[kN]	[kN]
300	**5,96**	**3,70**
500	**3,57**	**2,22**
700	**2,55**	**1,58**

F_z [kN] as permanent loads at distance L. 2*L/3 and L/3.
F_x [kN] as variable loads at distance L. 2*L/3 and L/3.

Friction coefficient $\mu_0 = 0{,}2$ for friction in longitudinal direction. Max. deviation L/100.

Working loads in accordance with Eurocode 3

Beam Bracket F 80 - Variant b) anchored

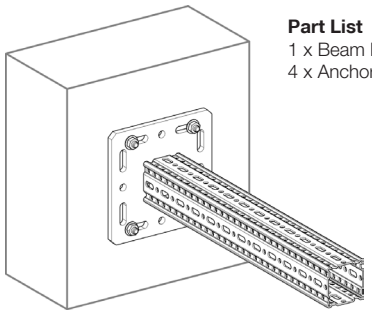

Part List
1 x Beam Bracket TKO F 80
4 x Anchors

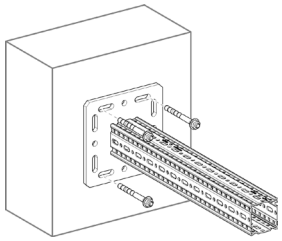

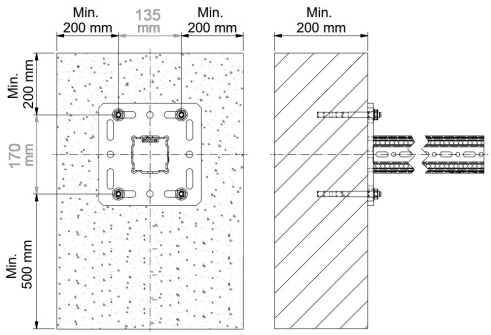

Distributed Load

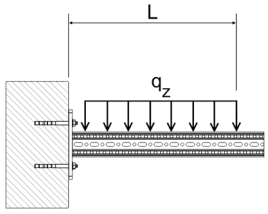

Anchor / L_{max}	Bolt Anchor AN BZ plus M12 hef. 70		Bolt Anchor AN BZ3 M12 hef. 125		Injection system VMZ-A M12x125	
	$q_{z,\,perm}$	F_z ($q_{z,\,perm}$ * L)	$q_{z,\,perm}$	F_z ($q_{z,\,perm}$ * L)	$q_{z,\,perm}$	F_z ($q_{z,\,perm}$ * L)
[mm]	[kN/m]	[kN]	[kN/m]	[kN]	[kN/m]	[kN]
300	**29,61**	**8,88**	**35,19**	**10,56**	**37,73**	**11,32**
500	**14,14**	**7,07**	**17,29**	**8,64**	**19,17**	**9,59**
700	**8,39**	**5,87**	**10,46**	**7,32**	**11,88**	**8,31**

q_z [kN/m] as permanent load over L.

Point Load

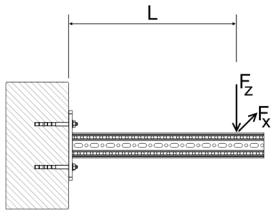

Anchor / L_{max}	Bolt Anchor AN BZ plus M12 hef. 70		Bolt Anchor AN BZ3 M12 hef. 125		Injection system VMZ-A M12x125	
	$F_{z,\,perm}$ for		$F_{z,\,perm}$ for		$F_{z,\,perm}$ for	
	$F_x = 0$	$F_x = \mu_0 * F_z$	$F_x = 0$	$F_x = \mu_0 * F_z$	$F_x = 0$	$F_x = \mu_0 * F_z$
[mm]	[kN]	[kN]	[kN]	[kN]	[kN]	[kN]
300	**6,41**	**6,41**	**7,93**	**7,93**	**8,90**	**8,90**
500	**4,68**	**4,68**	**5,95**	**5,95**	**6,93**	**6,80**
700	**3,68**	**3,68**	**4,21**	**4,21**	**4,40**	**4,40**

F_z [kN] as a permanent load at distance L. F_x [kN] as a variable load at distance L.

2 Point Loads

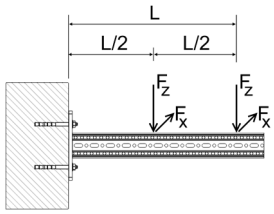

Anchor / L_{max}	Bolt Anchor AN BZ plus M12 hef. 70		Bolt Anchor AN BZ3 M12 hef. 125		Injection system VMZ-A M12x125	
	$F_{z,\,perm}$ for		$F_{z,\,perm}$ for		$F_{z,\,perm}$ for	
	$F_x = 0$	$F_x = \mu_0 * F_z$	$F_x = 0$	$F_x = \mu_0 * F_z$	$F_x = 0$	$F_x = \mu_0 * F_z$
[mm]	[kN]	[kN]	[kN]	[kN]	[kN]	[kN]
300	**3,72**	**3,72**	**4,53**	**4,53**	**4,98**	**4,98**
500	**2,82**	**2,82**	**3,52**	**3,52**	**4,02**	**4,02**
700	**2,26**	**2,26**	**2,89**	**2,89**	**3,15**	**3,15**

F_z [kN] as permanent loads at distance L and L/2. F_x [kN] as variable loads at distance L and L/2.

3 Point Loads

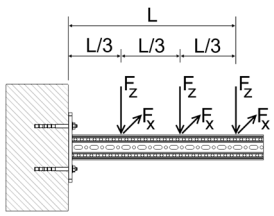

Anchor / L_{max}	Bolt Anchor AN BZ plus M12 hef. 70		Bolt Anchor AN BZ3 M12 hef. 125		Injection system VMZ-A M12x125	
	$F_{z,\,perm}$ for		$F_{z,\,perm}$ for		$F_{z,\,perm}$ for	
	$F_x = 0$	$F_x = \mu_0 * F_z$	$F_x = 0$	$F_x = \mu_0 * F_z$	$F_x = 0$	$F_x = \mu_0 * F_z$
[mm]	[kN]	[kN]	[kN]	[kN]	[kN]	[kN]
300	**2,62**	**2,62**	**3,17**	**3,17**	**3,46**	**3,46**
500	**2,01**	**2,01**	**2,50**	**2,50**	**2,83**	**2,83**
700	**1,63**	**1,63**	**2,07**	**2,07**	**2,40**	**2,40**

F_z [kN] as permanent loads at distance L. 2*L/3 and L/3. F_x [kN] as variable loads at distance L. 2*L/3 and L/3.

Friction coefficient μ_0 = 0,2 for friction in longitudinal direction. Max. deviation L/100.
Max. permissible anchor loads according to EN 1992-4; Material: Steel galvanised. Cracked concrete C20/25 f_{ck} = 20 N/mm.
Min. component thickness and edge distances to be respected.

Working loads in accordance with Eurocode 3

Beam Section TP F 100

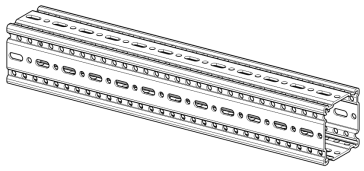

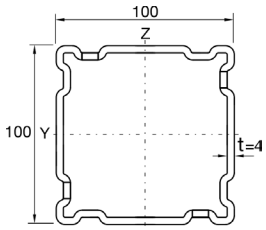

Single-span beam with uniaxial load

Distributed Load

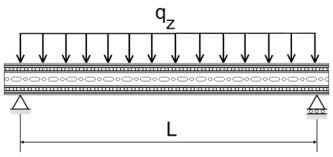

L_{max}	$q_{z,\ perm}$	F_z ($q_{z,\ perm}$ * L)
[mm]	[kN/m]	[kN]
1000	**53,71**	**53,71**
2000	**15,58**	**31,17**
3000	**5,07**	**15,22**
4000	**2,08**	**8,32**
5000	**1,01**	**5,06**
6000	**0,54**	**3,25**

q_z [kN/m] as permanent load over L.

Point Load

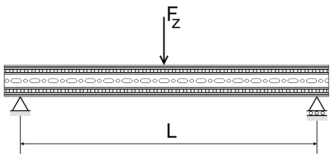

L_{max}	$F_{z,\ perm}$
[mm]	[kN]
1000	**31,33**
2000	**15,58**
3000	**9,51**
4000	**5,20**
5000	**3,17**
6000	**2,03**

F_z [kN] as a permanent load at L/2.

2 Point Loads

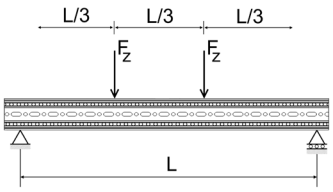

L_{max}	$F_{z,\ perm}$
[mm]	[kN]
1000	**23,50**
2000	**11,69**
3000	**5,58**
4000	**3,05**
5000	**1,86**
6000	**1,19**

F_z [kN] as permanent loads at L/3 and 2*L/3.

3 Point Loads

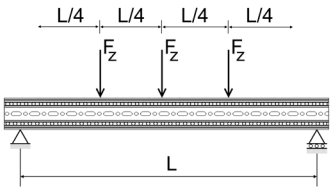

L_{max}	$F_{z,\ perm}$
[mm]	[kN]
1000	**15,66**
2000	**7,79**
3000	**4,01**
4000	**2,19**
5000	**1,33**
6000	**0,86**

F_z [kN] as permanent loads at L/4. L/2 and 3*L/4.

Max. bending L/200.
Dead weight of the profile is considered.

03/2026

Working loads in accordance with Eurocode 3

L-Construction F 100 / AK

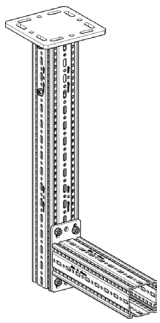

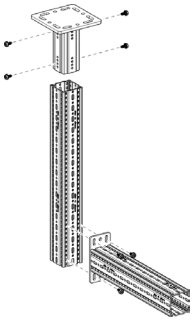

Part List
1 x End Support WBD-4KT 80/120-F100
1 x Beam Section TP F 100
1 x Cantilever Bracket AK F 100
8 x Self-Forming-Screw FLS F

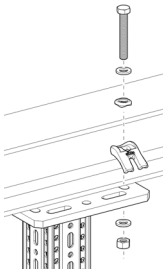

Note:
Unless otherwise stated, the information is based on installation using the Assembly Set MS 5P M12 S. If fixings are done using anchors, these must be verified separately.

Distributed Load

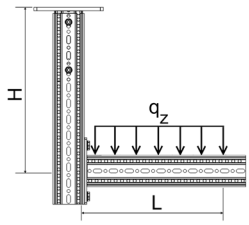

H_{max} \ L_{max}	300		500		700		900		1100	
	$q_{z,\,perm}$	F_z (q_z * L)	$q_{z,\,perm}$	F_z (q_z * L)	$q_{z,\,perm}$	F_z (q_z * L)	$q_{z,\,perm}$	F_z (q_z * L)	$q_{z,\,perm}$	F_z (q_z * L)
[mm]	[kN/m]	[kN]	[kN/m]	[kN]	[kN/m]	[kN]	[kN/m]	[kN]	[kN/m]	[kN]
1000	**18,64**	**5,59**	**7,60**	**3,80**	**4,03**	**2,82**	**2,46**	**2,21**	**1,64**	**1,80**
1500	**15,74**	**4,72**	**6,45**	**3,23**	**3,43**	**2,40**	**2,10**	**1,89**	**1,39**	**1,53**
2000	**13,61**	**4,08**	**5,60**	**2,80**	**2,98**	**2,09**	**1,82**	**1,64**	**1,21**	**1,33**
2500	**11,99**	**3,60**	**4,95**	**2,47**	**2,64**	**1,85**	**1,61**	**1,45**	**1,07**	**1,17**

q_z [kN/m] as permanent load over L.

Point Load

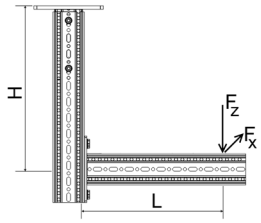

H_{max} \ L_{max}	300		500		700		900		1100	
	$F_{z,\,perm}$ for		$F_{z,\,perm}$ for		$F_{z,\,perm}$ for		$F_{z,\,perm}$ for		$F_{z,\,perm}$ for	
	$F_x = 0$	$F_x = \mu_0 * F_z$	$F_x = 0$	$F_x = \mu_0 * F_z$	$F_x = 0$	$F_x = \mu_0 * F_z$	$F_x = 0$	$F_x = \mu_0 * F_z$	$F_x = 0$	$F_x = \mu_0 * F_z$
[mm]	[kN]	[kN]	[kN]	[kN]	[kN]	[kN]	[kN]	[kN]	[kN]	[kN]
1000	**3,15**	**3,15**	**2,02**	**2,02**	**1,46**	**1,46**	**1,13**	**1,13**	**0,90**	**0,90**
1500	**2,67**	**2,67**	**1,73**	**1,73**	**1,25**	**1,25**	**0,97**	**0,97**	**0,77**	**0,77**
2000	**2,32**	**2,32**	**1,50**	**1,50**	**1,09**	**1,09**	**0,84**	**0,84**	**0,68**	**0,68**
2500	**2,05**	**2,05**	**1,33**	**1,33**	**0,97**	**0,97**	**0,75**	**0,75**	**0,60**	**0,60**

F_z [kN] as a permanent load at distance L. F_x [kN] as a variable load at distance L.

2 Point Loads

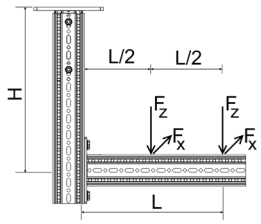

H_{max} \ L_{max}	300		500		700		900		1100	
	$F_{z,\,perm}$ for		$F_{z,\,perm}$ for		$F_{z,\,perm}$ for		$F_{z,\,perm}$ for		$F_{z,\,perm}$ for	
	$F_x = 0$	$F_x = \mu_0 * F_z$	$F_x = 0$	$F_x = \mu_0 * F_z$	$F_x = 0$	$F_x = \mu_0 * F_z$	$F_x = 0$	$F_x = \mu_0 * F_z$	$F_x = 0$	$F_x = \mu_0 * F_z$
[mm]	[kN]	[kN]	[kN]	[kN]	[kN]	[kN]	[kN]	[kN]	[kN]	[kN]
1000	**2,04**	**2,03**	**1,33**	**1,33**	**0,97**	**0,97**	**0,75**	**0,75**	**0,61**	**0,61**
1500	**1,73**	**1,73**	**1,13**	**1,13**	**0,83**	**0,83**	**0,64**	**0,64**	**0,52**	**0,52**
2000	**1,50**	**1,50**	**0,99**	**0,99**	**0,72**	**0,72**	**0,56**	**0,56**	**0,45**	**0,45**
2500	**1,32**	**1,32**	**0,87**	**0,87**	**0,64**	**0,64**	**0,50**	**0,50**	**0,40**	**0,40**

F_z [kN] as permanent loads at distance L and L/2. F_x [kN] as variable loads at distance L and L/2.

3 Point Loads

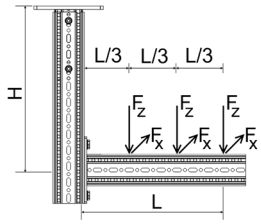

H_{max} \ L_{max}	300		500		700		900		1100	
	$F_{z,\,perm}$ for		$F_{z,\,perm}$ for		$F_{z,\,perm}$ for		$F_{z,\,perm}$ for		$F_{z,\,perm}$ for	
	$F_x = 0$	$F_x = \mu_0 * F_z$	$F_x = 0$	$F_x = \mu_0 * F_z$	$F_x = 0$	$F_x = \mu_0 * F_z$	$F_x = 0$	$F_x = \mu_0 * F_z$	$F_x = 0$	$F_x = \mu_0 * F_z$
[mm]	[kN]	[kN]	[kN]	[kN]	[kN]	[kN]	[kN]	[kN]	[kN]	[kN]
1000	**1,49**	**1,44**	**0,98**	**0,98**	**0,72**	**0,72**	**0,56**	**0,56**	**0,45**	**0,45**
1500	**1,26**	**1,26**	**0,83**	**0,83**	**0,61**	**0,61**	**0,48**	**0,48**	**0,38**	**0,38**
2000	**1,09**	**1,09**	**0,73**	**0,73**	**0,53**	**0,53**	**0,41**	**0,41**	**0,33**	**0,33**
2500	**0,97**	**0,97**	**0,64**	**0,64**	**0,47**	**0,47**	**0,37**	**0,37**	**0,30**	**0,30**

F_z [kN] as permanent loads at distance L. 2*L/3 and L/3. F_x [kN] as variable loads at distance L. 2*L/3 and L/3.

All illustrated structures are able to be installed standing as well.
Friction coefficient $\mu_0 = 0{,}2$ for friction in longitudinal direction. Max. deviation H/100; L/100.

Working loads in accordance with Eurocode 3

L-Construction F 100 / AK-E

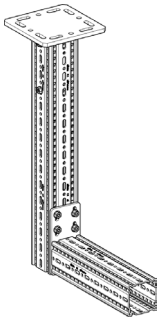

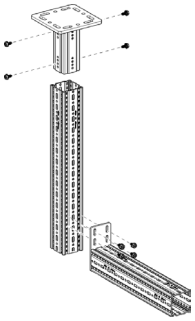

Part List
1 x End Support WBD-4KT 80/120-F100
1 x Beam Section TP F 100
1 x Cantilever Bracket AK F 100-E
8 x Self-Forming-Screw FLS F

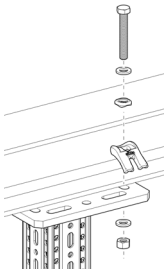

Note:
Unless otherwise stated, the information is based on installation using the Assembly Set MS 5P M12 S. If fixings are done using anchors, these must be verified separately.

Distributed Load

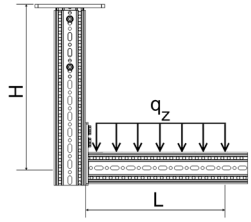

H_{max} \ L_{max}	200		400		600	
	$q_{z.\,perm}$	F_z (q_z * L)	$q_{z.\,perm}$	F_z (q_z * L)	$q_{z.\,perm}$	F_z (q_z * L)
[mm]	[kN/m]	[kN]	[kN/m]	[kN]	[kN/m]	[kN]
1000	**29,30**	**5,86**	**8,93**	**3,57**	**4,18**	**2,51**
1500	**25,31**	**5,06**	**7,82**	**3,13**	**3,68**	**2,21**
2000	**22,27**	**4,45**	**6,95**	**2,78**	**3,28**	**1,97**
2500	**19,88**	**3,98**	**6,26**	**2,50**	**2,96**	**1,78**

q_z [kN/m] as permanent load over L.

Point Load

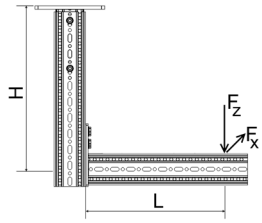

H_{max} \ L_{max}	200		400		1100	
	$F_{z.\,perm}$ for		$F_{z.\,perm}$ for		$F_{z.\,perm}$ for	
	$F_x = 0$	$F_x = \mu_0 * F_z$	$F_x = 0$	$F_x = \mu_0 * F_z$	$F_x = 0$	$F_x = \mu_0 * F_z$
[mm]	[kN]	[kN]	[kN]	[kN]	[kN]	[kN]
1000	**3,40**	**3,40**	**1,91**	**1,91**	**1,30**	**1,30**
1500	**2,97**	**2,97**	**1,68**	**1,68**	**1,15**	**1,15**
2000	**2,63**	**2,63**	**1,50**	**1,50**	**1,03**	**1,03**
2500	**2,36**	**2,36**	**1,36**	**1,36**	**0,93**	**0,93**

F_z [kN] as a permanent load at distance L. F_x [kN] as a variable load at distance L.

2 Point Loads

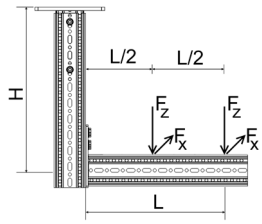

H_{max} \ L_{max}	200		400		600	
	$F_{z.\,perm}$ for		$F_{z.\,perm}$ for		$F_{z.\,perm}$ for	
	$F_x = 0$	$F_x = \mu_0 * F_z$	$F_x = 0$	$F_x = \mu_0 * F_z$	$F_x = 0$	$F_x = \mu_0 * F_z$
[mm]	[kN]	[kN]	[kN]	[kN]	[kN]	[kN]
1000	**2,18**	**2,18**	**1,25**	**1,25**	**0,86**	**0,86**
1500	**1,90**	**1,90**	**1,10**	**1,10**	**0,76**	**0,76**
2000	**1,68**	**1,68**	**0,98**	**0,98**	**0,68**	**0,68**
2500	**1,50**	**1,50**	**0,89**	**0,89**	**0,61**	**0,61**

F_z [kN] as permanent loads at distance L and L/2. F_x [kN] as variable loads at distance L and L/2.

3 Point Loads

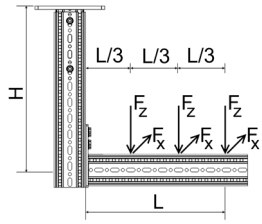

H_{max} \ L_{max}	200		400		600	
	$F_{z.\,perm}$ for		$F_{z.\,perm}$ for		$F_{z.\,perm}$ for	
	$F_x = 0$	$F_x = \mu_0 * F_z$	$F_x = 0$	$F_x = \mu_0 * F_z$	$F_x = 0$	$F_x = \mu_0 * F_z$
[mm]	[kN]	[kN]	[kN]	[kN]	[kN]	[kN]
1000	**1,58**	**1,58**	**0,91**	**0,91**	**0,63**	**0,63**
1500	**1,37**	**1,37**	**0,80**	**0,80**	**0,56**	**0,56**
2000	**1,21**	**1,21**	**0,72**	**0,72**	**0,50**	**0,50**
2500	**1,09**	**1,09**	**0,65**	**0,65**	**0,45**	**0,45**

F_z [kN] as permanent loads at distance L. 2*L/3 and L/3. F_x [kN] as variable loads at distance L. 2*L/3 and L/3.

Friction coefficient μ_0 = 0,2 for friction in longitudinal direction. Max. deviation H/100; L/100.

Working loads in accordance with Eurocode 3

T-Support F 100 / STA

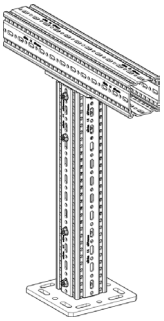

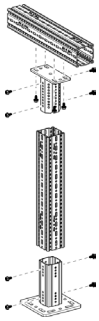

Part List
1 x End Support WBD-4KT 80/120-F100
2 x Beam Section TP F 100
1 x End Support STA F 100
12 x Self-Forming-Screw FLS F

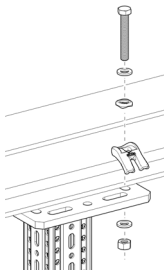

Note:
Unless otherwise stated, the information is based on installation using the Assembly Set MS 5P M12 S. If fixings are done using anchors, these must be verified separately.

Distributed Load - symmetrical

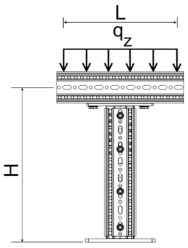

L_{max}	H_{max} = 2 m	
	$q_{z,\ perm}$	F_z ($q_{z,\ perm}$ x L)
[mm]	[kN/m]	[kN]
500	**26,69**	**13,35**
750	**14,51**	**10,88**
1000	**9,17**	**9,17**
1250	**6,33**	**7,91**

q_z [kN/m] as permanent load over L.

Point Load - centrical

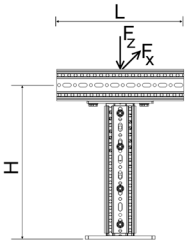

H_{max}	L_{max} = 1 m $F_{z,\ perm}$ for	
	$F_x = 0$	$F_x = \mu_0 * F_z$
[mm]	[kN]	[kN]
500	**17,35**	**13,25**
1000	**17,35**	**7,08**
1500	**17,35**	**4,25**
2000	**17,35**	**2,90**

F_z [kN] as a permanent load. F_x [kN] as a variable load;
Central load introduction for planned eccentricity ± 30 mm.

2 Point Loads

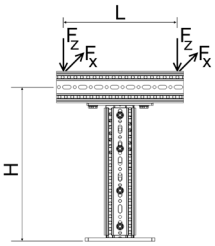

H_{max} \ L_{max}	500 $F_{z,\ perm}$ for		750 $F_{z,\ perm}$ for		1000 $F_{z,\ perm}$ for	
	$F_x = 0$	$F_x = \mu_0 * F_z$	$F_x = 0$	$F_x = \mu_0 * F_z$	$F_x = 0$	$F_x = \mu_0 * F_z$
[mm]	[kN]	[kN]	[kN]	[kN]	[kN]	[kN]
500	**4,61**	**3,82**	**3,52**	**2,98**	**2,84**	**2,44**
1000	**4,61**	**3,54**	**3,52**	**2,98**	**2,84**	**2,44**
1500	**4,61**	**2,13**	**3,52**	**2,13**	**2,84**	**2,13**
2000	**4,61**	**1,45**	**3,52**	**1,45**	**2,84**	**1,45**

F_z [kN] as permanent loads at distance L. F_x [kN] as variable loads at distance L.

3 Point Loads

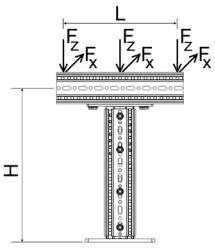

H_{max} \ L_{max}	500 $F_{z,\ perm}$ for		750 $F_{z,\ perm}$ for		1000 $F_{z,\ perm}$ for	
	$F_x = 0$	$F_x = \mu_0 * F_z$	$F_x = 0$	$F_x = \mu_0 * F_z$	$F_x = 0$	$F_x = \mu_0 * F_z$
[mm]	[kN]	[kN]	[kN]	[kN]	[kN]	[kN]
500	**3,87**	**2,96**	**3,07**	**2,28**	**2,54**	**1,85**
1000	**3,87**	**2,36**	**3,07**	**2,28**	**2,54**	**1,85**
1500	**3,87**	**1,42**	**3,07**	**1,42**	**2,54**	**1,42**
2000	**3,87**	**0,97**	**3,07**	**0,97**	**2,54**	**0,97**

F_z [kN] as permanent loads at distance L and L/2. F_x [kN] as variable loads at distance L and L/2.

All illustrated structures are able to be installed standing as well.
Friction coefficient μ_0 = 0,2 for friction in longitudinal direction. Max. Deviation H/150.

Working loads in accordance with Eurocode 3

T-Support F 100 / WD

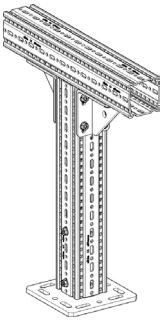

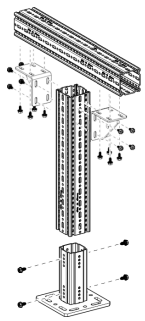

Part List
1 x End Support WBD-4KT 80/120-F100
2 x Beam Section TP F 100
2 x Corner Bracket WD F 100
20 x Self-Forming-Screw FLS F

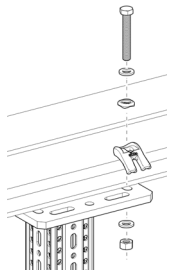

Note:
Unless otherwise stated, the information is based on installation using the Assembly Set MS 5P M12 S. If fixings are done using anchors, these must be verified separately.

Distributed Load - symmetrical

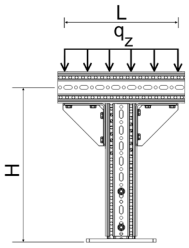

L_{max}	H_{max} = 2 m	
	$q_{z.\ perm}$	F_z ($q_{z.\ perm}$ x L)
[mm]	[kN/m]	[kN]
500	**46,85**	**23,42**
750	**27,68**	**20,76**
1000	**18,63**	**18,63**
1250	**13,51**	**16,89**

q_z [kN/m] as permanent load over L.

Point Load - centrical

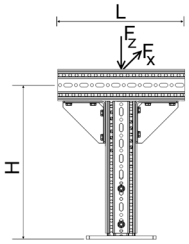

H_{max}	L_{max} = 1 m $F_{z.\ perm}$ for	
	$F_x = 0$	$F_x = \mu_0 * F_z$
[mm]	[kN]	[kN]
500	**23,42**	**14,69**
1000	**23,42**	**7,08**
1500	**23,42**	**4,25**
2000	**23,42**	**2,90**

F_z [kN] as a permanent load. F_x [kN] as a variable load;
Central load introduction for planned eccentricity ± 30 mm.

2 Point Loads

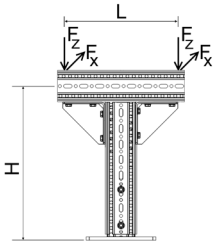

H_{max} \ L_{max}	500 $F_{z.\ perm}$ for		750 $F_{z.\ perm}$ for		1000 $F_{z.\ perm}$ for	
	$F_x = 0$	$F_x = \mu_0 * F_z$	$F_x = 0$	$F_x = \mu_0 * F_z$	$F_x = 0$	$F_x = \mu_0 * F_z$
[mm]	[kN]	[kN]	[kN]	[kN]	[kN]	[kN]
500	**9,34**	**6,55**	**7,77**	**5,28**	**6,64**	**4,39**
1000	**9,34**	**3,54**	**7,77**	**3,54**	**6,64**	**3,54**
1500	**9,34**	**2,13**	**7,77**	**2,13**	**6,64**	**2,13**
2000	**9,34**	**1,45**	**7,77**	**1,45**	**6,64**	**1,45**

F_z [kN] as permanent loads at distance L. F_x [kN] as variable loads at distance L.

3 Point Loads

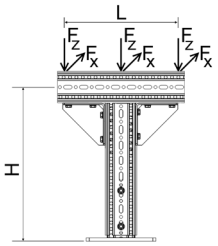

H_{max} \ L_{max}	500 $F_{z.\ perm}$ for		750 $F_{z.\ perm}$ for		1000 $F_{z.\ perm}$ for	
	$F_x = 0$	$F_x = \mu_0 * F_z$	$F_x = 0$	$F_x = \mu_0 * F_z$	$F_x = 0$	$F_x = \mu_0 * F_z$
[mm]	[kN]	[kN]	[kN]	[kN]	[kN]	[kN]
500	**7,20**	**5,15**	**6,22**	**4,36**	**5,47**	**3,76**
1000	**7,20**	**2,36**	**6,22**	**2,36**	**5,47**	**2,36**
1500	**7,20**	**1,42**	**6,22**	**1,42**	**5,47**	**1,42**
2000	**7,20**	**0,97**	**6,22**	**0,97**	**5,47**	**0,97**

F_z [kN] as permanent loads at distance L and L/2. F_x [kN] as variable loads at distance L and L/2.

All illustrated structures are able to be installed standing as well.
Friction coefficient μ_0 = 0,2 for friction in longitudinal direction. Max. Deviation H/150.

03/2026

Working loads in accordance with Eurocode 3

Frame F 100 / STA

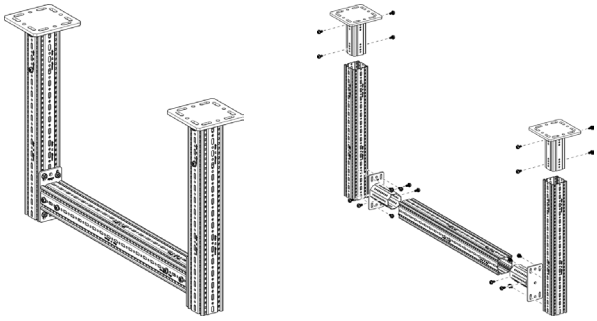

Part List
2 x End Support WBD-4KT 80/120-F100
3 x Beam Section TP F 100
2 x End Support STA F 100
24 x Self-Forming-Screw FLS F

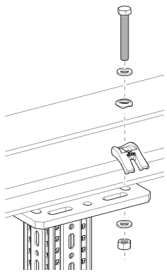

Note:
Unless otherwise stated, the information is based on installation using the Assembly Set MS 5P M12 S. If fixings are done using anchors, these must be verified separately.

Distributed Load

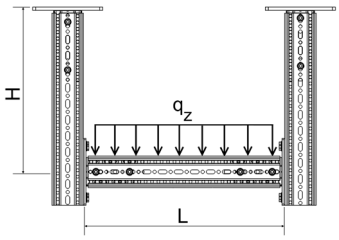

H_{max} \ L_{max}	1500		2000		2500		3000		3500		4000	
	$q_{z.\,perm}$	F_z (q_z * L)	$q_{z.\,perm}$	F_z (q_z * L)	$q_{z.\,perm}$	F_z (q_z * L)	$q_{z.\,perm}$	F_z (q_z * L)	$q_{z.\,perm}$	F_z (q_z * L)	$q_{z.\,perm}$	F_z (q_z * L)
[mm]	[kN/m]	[kN]	[kN/m]	[kN]	[kN/m]	[kN]	[kN/m]	[kN]	[kN/m]	[kN]	[kN/m]	[kN]
1500	**21,78**	**32,67**	**14,81**	**29,62**	**8,87**	**22,18**	**5,60**	**16,80**	**3,80**	**13,29**	**2,66**	**10,63**
2000	**21,78**	**32,67**	**14,61**	**29,22**	**8,77**	**21,92**	**5,54**	**16,61**	**3,75**	**13,14**	**2,63**	**10,51**
2500	**21,78**	**32,67**	**14,42**	**28,84**	**8,67**	**21,67**	**5,42**	**16,25**	**3,71**	**13,00**	**2,60**	**10,40**
3000	**21,78**	**32,67**	**14,30**	**28,60**	**8,57**	**21,43**	**5,47**	**16,42**	**3,68**	**12,87**	**2,57**	**10,29**
3500	**21,78**	**32,67**	**14,06**	**28,13**	**8,50**	**21,25**	**5,40**	**16,20**	**3,64**	**12,74**	**2,55**	**10,19**

q_z [kN/m] as permanent load over L.

Point Load

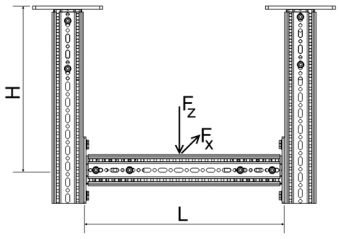

H_{max} \ L_{max}	1500		2000		2500		3000		3500		4000	
	$F_{z.\,perm}$ for		$F_{z.\,perm}$ for		$F_{z.\,perm}$ for		$F_{z.\,perm}$ for		$F_{z.\,perm}$ for		$F_{z.\,perm}$ for	
	$F_x = 0$	$F_x = \mu_0 * F_z$	$F_x = 0$	$F_x = \mu_0 * F_z$	$F_x = 0$	$F_x = \mu_0 * F_z$	$F_x = 0$	$F_x = \mu_0 * F_z$	$F_x = 0$	$F_x = \mu_0 * F_z$	$F_x = 0$	$F_x = \mu_0 * F_z$
[mm]	[kN]	[kN]	[kN]	[kN]	[kN]	[kN]	[kN]	[kN]	[kN]	[kN]	[kN]	[kN]
1500	**22,42**	**8,58**	**17,23**	**8,52**	**13,66**	**8,46**	**10,38**	**8,39**	**8,09**	**7,61**	**6,47**	**6,08**
2000	**22,34**	**6,51**	**17,17**	**6,46**	**13,53**	**6,41**	**10,28**	**6,35**	**8,02**	**6,29**	**6,41**	**6,02**
2500	**22,26**	**5,24**	**17,11**	**5,21**	**13,40**	**5,17**	**10,19**	**5,13**	**7,95**	**5,08**	**6,35**	**5,02**
3000	**22,18**	**4,39**	**17,04**	**4,37**	**13,28**	**4,34**	**10,10**	**4,30**	**7,88**	**4,26**	**6,29**	**4,22**
3500	**22,11**	**3,78**	**16,99**	**3,76**	**13,16**	**3,74**	**10,02**	**3,71**	**7,81**	**3,68**	**6,24**	**3,64**

F_z [kN] as a permanent load at distance L/2. F_x [kN] as a variable load at distance L/2.

2 Point Loads

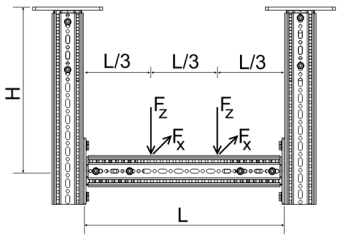

H_{max} \ L_{max}	1500		2000		2500		3000		3500		4000	
	$F_{z.\,perm}$ for		$F_{z.\,perm}$ for		$F_{z.\,perm}$ for		$F_{z.\,perm}$ for		$F_{z.\,perm}$ for		$F_{z.\,perm}$ for	
	$F_x = 0$	$F_x = \mu_0 * F_z$	$F_x = 0$	$F_x = \mu_0 * F_z$	$F_x = 0$	$F_x = \mu_0 * F_z$	$F_x = 0$	$F_x = \mu_0 * F_z$	$F_x = 0$	$F_x = \mu_0 * F_z$	$F_x = 0$	$F_x = \mu_0 * F_z$
[mm]	[kN]	[kN]	[kN]	[kN]	[kN]	[kN]	[kN]	[kN]	[kN]	[kN]	[kN]	[kN]
1500	**15,79**	**4,29**	**11,28**	**4,27**	**8,20**	**4,24**	**6,22**	**4,21**	**4,87**	**4,17**	**3,92**	**3,69**
2000	**15,41**	**3,26**	**11,15**	**3,24**	**8,11**	**3,21**	**6,16**	**3,19**	**4,82**	**3,16**	**3,88**	**3,13**
2500	**15,19**	**2,62**	**11,10**	**2,61**	**8,03**	**2,59**	**6,10**	**2,57**	**4,78**	**2,55**	**3,84**	**2,53**
3000	**14,90**	**2,20**	**11,10**	**2,19**	**7,94**	**2,17**	**6,04**	**2,16**	**4,73**	**2,14**	**3,81**	**2,12**
3500	**14,78**	**1,89**	**10,78**	**1,88**	**7,85**	**1,87**	**6,00**	**1,86**	**4,69**	**1,85**	**3,77**	**1,83**

F_z [kN] as permanent loads at distance 2*L/3 and L/3. F_x [kN] as variable loads at distance 2*L/3 and L/3.

3 Point Loads

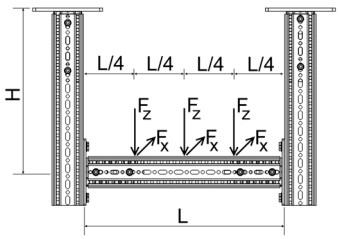

H_{max} \ L_{max}	1500		2000		2500		3000		3500		4000	
	$F_{z.\,perm}$ for		$F_{z.\,perm}$ for		$F_{z.\,perm}$ for		$F_{z.\,perm}$ for		$F_{z.\,perm}$ for		$F_{z.\,perm}$ for	
	$F_x = 0$	$F_x = \mu_0 * F_z$	$F_x = 0$	$F_x = \mu_0 * F_z$	$F_x = 0$	$F_x = \mu_0 * F_z$	$F_x = 0$	$F_x = \mu_0 * F_z$	$F_x = 0$	$F_x = \mu_0 * F_z$	$F_x = 0$	$F_x = \mu_0 * F_z$
[mm]	[kN]	[kN]	[kN]	[kN]	[kN]	[kN]	[kN]	[kN]	[kN]	[kN]	[kN]	[kN]
1500	**10,85**	**2,86**	**7,94**	**2,85**	**5,87**	**2,83**	**4,48**	**2,81**	**3,46**	**2,79**	**2,79**	**2,62**
2000	**10,78**	**2,17**	**7,84**	**2,16**	**5,81**	**2,15**	**4,43**	**2,13**	**3,43**	**2,11**	**2,76**	**2,09**
2500	**10,60**	**1,75**	**7,75**	**1,74**	**5,74**	**1,73**	**4,39**	**1,72**	**3,39**	**1,70**	**2,73**	**1,69**
3000	**10,41**	**1,47**	**7,64**	**1,46**	**5,67**	**1,45**	**4,33**	**1,44**	**3,36**	**1,43**	**2,71**	**1,42**
3500	**10,27**	**1,26**	**7,56**	**1,26**	**5,61**	**1,25**	**4,29**	**1,24**	**3,33**	**1,23**	**2,68**	**1,22**

F_z [kN] as permanent loads at distance 3*L/4. L/2 and L/4. F_x [kN] as variable loads at distance 3*L/4. L/2 and L/4.

All illustrated structures are able to be installed standing as well.
Friction coefficient $\mu_0 = 0{,}2$ for friction in longitudinal direction. Max. deviation H/100; L/200.

Working loads in accordance with Eurocode 3

Frame F 100 / STA-E

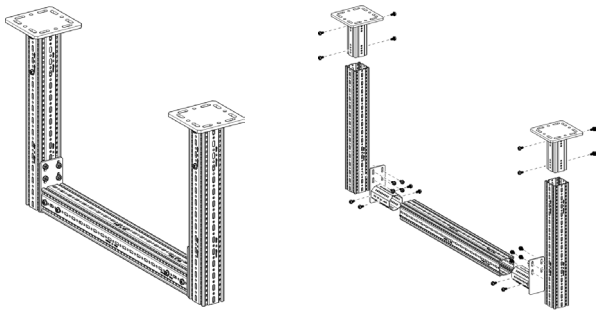

Part List
2 x End Support WBD-4KT 80/120-F100
3 x Beam Section TP F 100
2 x End Support STA F 100-E
24 x Self-Forming-Screw FLS F

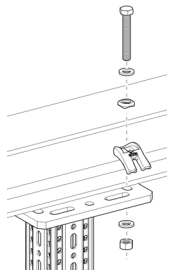

Note:
Unless otherwise stated, the information is based on installation using the Assembly Set MS 5P M12 S. If fixings are done using anchors, these must be verified separately.

Distributed Load

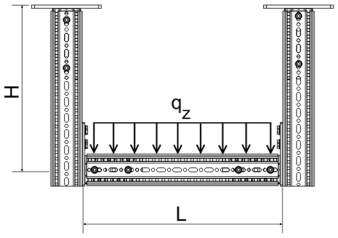

H_{max} \ L_{max}	1500		2000		2500		3000		3500		4000	
	$q_{z.\,perm}$	F_z (q_z * L)	$q_{z.\,perm}$	F_z (q_z * L)	$q_{z.\,perm}$	F_z (q_z * L)	$q_{z.\,perm}$	F_z (q_z * L)	$q_{z.\,perm}$	F_z (q_z * L)	$q_{z.\,perm}$	F_z (q_z * L)
[mm]	[kN/m]	[kN]	[kN/m]	[kN]	[kN/m]	[kN]	[kN/m]	[kN]	[kN/m]	[kN]	[kN/m]	[kN]
1500	**27,37**	**41,05**	**15,01**	**30,02**	**8,88**	**22,21**	**5,61**	**16,83**	**3,80**	**13,31**	**2,66**	**10,65**
2000	**26,61**	**39,92**	**14,81**	**29,62**	**8,78**	**21,95**	**5,55**	**16,64**	**3,76**	**13,17**	**2,63**	**10,54**
2500	**26,17**	**39,26**	**14,61**	**29,23**	**8,68**	**21,69**	**5,43**	**16,28**	**3,72**	**13,03**	**2,61**	**10,42**
3000	**26,17**	**39,26**	**14,49**	**28,99**	**8,58**	**21,46**	**5,48**	**16,45**	**3,68**	**12,89**	**2,58**	**10,32**
3500	**25,37**	**38,05**	**14,26**	**28,51**	**8,51**	**21,28**	**5,41**	**16,23**	**3,65**	**12,77**	**2,55**	**10,21**

q_z [kN/m] as permanent load over L.

Point Load

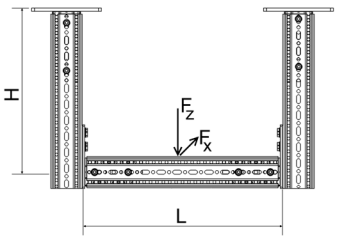

H_{max} \ L_{max}	1500		2000		2500		3000		3500		4000	
	$F_{z.\,perm}$ for		$F_{z.\,perm}$ for		$F_{z.\,perm}$ for		$F_{z.\,perm}$ for		$F_{z.\,perm}$ for		$F_{z.\,perm}$ for	
	$F_x = 0$	$F_x = \mu_0 * F_z$	$F_x = 0$	$F_x = \mu_0 * F_z$	$F_x = 0$	$F_x = \mu_0 * F_z$	$F_x = 0$	$F_x = \mu_0 * F_z$	$F_x = 0$	$F_x = \mu_0 * F_z$	$F_x = 0$	$F_x = \mu_0 * F_z$
[mm]	[kN]	[kN]	[kN]	[kN]	[kN]	[kN]	[kN]	[kN]	[kN]	[kN]	[kN]	[kN]
1500	**22,43**	**8,22**	**17,24**	**8,16**	**13,68**	**8,10**	**10,40**	**8,04**	**8,11**	**7,30**	**6,48**	**5,83**
2000	**22,36**	**6,23**	**17,18**	**6,19**	**13,54**	**6,14**	**10,30**	**6,09**	**8,03**	**6,02**	**6,42**	**5,78**
2500	**22,28**	**5,02**	**17,12**	**4,99**	**13,41**	**4,95**	**10,21**	**4,91**	**7,96**	**4,86**	**6,36**	**4,81**
3000	**22,20**	**4,21**	**17,06**	**4,18**	**13,29**	**4,15**	**10,12**	**4,12**	**7,89**	**4,08**	**6,30**	**4,04**
3500	**22,12**	**3,62**	**17,00**	**3,60**	**13,18**	**3,58**	**10,03**	**3,55**	**7,83**	**3,52**	**6,25**	**3,45**

F_z [kN] as a permanent load at distance L/2. F_x [kN] as a variable load at distance L/2.

2 Point Loads

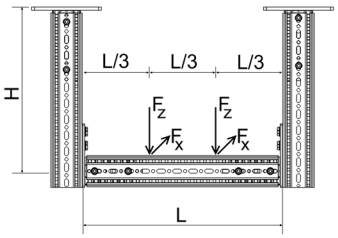

H_{max} \ L_{max}	1500		2000		2500		3000		3500		4000	
	$F_{z.\,perm}$ for		$F_{z.\,perm}$ for		$F_{z.\,perm}$ for		$F_{z.\,perm}$ for		$F_{z.\,perm}$ for		$F_{z.\,perm}$ for	
	$F_x = 0$	$F_x = \mu_0 * F_z$	$F_x = 0$	$F_x = \mu_0 * F_z$	$F_x = 0$	$F_x = \mu_0 * F_z$	$F_x = 0$	$F_x = \mu_0 * F_z$	$F_x = 0$	$F_x = \mu_0 * F_z$	$F_x = 0$	$F_x = \mu_0 * F_z$
[mm]	[kN]	[kN]	[kN]	[kN]	[kN]	[kN]	[kN]	[kN]	[kN]	[kN]	[kN]	[kN]
1500	**16,03**	**4,11**	**11,33**	**4,09**	**8,21**	**4,06**	**6,23**	**4,03**	**4,88**	**3,99**	**3,93**	**3,54**
2000	**15,65**	**3,12**	**11,20**	**3,10**	**8,12**	**3,08**	**6,17**	**3,05**	**4,83**	**3,03**	**3,89**	**3,00**
2500	**15,43**	**2,51**	**11,15**	**2,50**	**8,04**	**2,48**	**6,11**	**2,46**	**4,79**	**2,44**	**3,85**	**2,42**
3000	**15,13**	**2,11**	**11,15**	**2,09**	**7,96**	**2,08**	**6,05**	**2,07**	**4,74**	**2,05**	**3,82**	**2,03**
3500	**15,01**	**1,81**	**10,83**	**1,80**	**7,86**	**1,79**	**6,01**	**1,78**	**4,70**	**1,77**	**3,78**	**1,75**

F_z [kN] as permanent loads at distance 2*L/3 and L/3. F_x [kN] as variable loads at distance 2*L/3 and L/3.

3 Point Loads

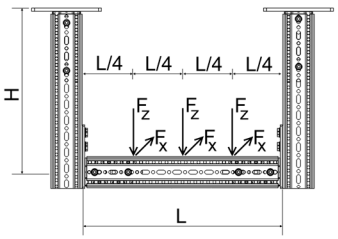

H_{max} \ L_{max}	1500		2000		2500		3000		3500		4000	
	$F_{z.\,perm}$ for		$F_{z.\,perm}$ for		$F_{z.\,perm}$ for		$F_{z.\,perm}$ for		$F_{z.\,perm}$ for		$F_{z.\,perm}$ for	
	$F_x = 0$	$F_x = \mu_0 * F_z$	$F_x = 0$	$F_x = \mu_0 * F_z$	$F_x = 0$	$F_x = \mu_0 * F_z$	$F_x = 0$	$F_x = \mu_0 * F_z$	$F_x = 0$	$F_x = \mu_0 * F_z$	$F_x = 0$	$F_x = \mu_0 * F_z$
[mm]	[kN]	[kN]	[kN]	[kN]	[kN]	[kN]	[kN]	[kN]	[kN]	[kN]	[kN]	[kN]
1500	**10,94**	**2,74**	**7,94**	**2,73**	**5,88**	**2,71**	**4,48**	**2,69**	**3,47**	**2,67**	**2,80**	**2,52**
2000	**10,78**	**2,08**	**7,85**	**2,07**	**5,81**	**2,05**	**4,44**	**2,04**	**3,43**	**2,02**	**2,77**	**2,00**
2500	**10,60**	**1,68**	**7,75**	**1,67**	**5,75**	**1,66**	**4,39**	**1,65**	**3,40**	**1,63**	**2,74**	**1,62**
3000	**10,42**	**1,40**	**7,65**	**1,40**	**5,68**	**1,39**	**4,34**	**1,38**	**3,37**	**1,37**	**2,71**	**1,36**
3500	**10,27**	**1,21**	**7,56**	**1,20**	**5,62**	**1,20**	**4,30**	**1,19**	**3,33**	**1,18**	**2,69**	**1,17**

F_z [kN] as permanent loads at distance 3*L/4. L/2 and L/4. F_x [kN] as variable loads at distance 3*L/4. L/2 and L/4.

Friction coefficient μ_0 = 0,2 for friction in longitudinal direction. Max. deviation H/100; L/200.

Working loads in accordance with Eurocode 3

Frame F 100 / WD

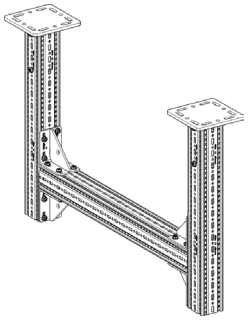

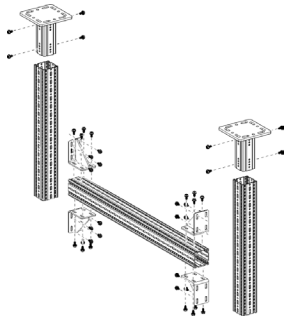

Part List
2 x End Support WBD-4KT 80/120-F100
3 x Beam Section TP F 100
4 x Corner Bracket WD F 100
40 x Self-Forming-Screw FLS F

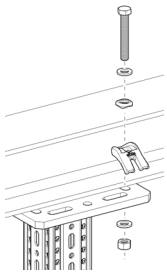

Note:
Unless otherwise stated, the information is based on installation using the Assembly Set MS 5P M12 S. If fixings are done using anchors, these must be verified separately.

Distributed Load

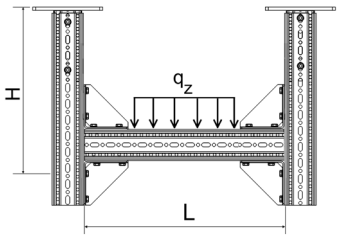

H_{max} \ L_{max}	1500		2000		2500		3000		3500		4000	
	$q_{z.\,perm}$	F_z (q_z * L)	$q_{z.\,perm}$	F_z (q_z * L)	$q_{z.\,perm}$	F_z (q_z * L)	$q_{z.\,perm}$	F_z (q_z * L)	$q_{z.\,perm}$	F_z (q_z * L)	$q_{z.\,perm}$	F_z (q_z * L)
[mm]	[kN/m]	[kN]	[kN/m]	[kN]	[kN/m]	[kN]	[kN/m]	[kN]	[kN/m]	[kN]	[kN/m]	[kN]
1500	**31,65**	**38,61**	**17,55**	**30,18**	**10,67**	**23,68**	**6,92**	**18,83**	**4,81**	**15,50**	**3,44**	**12,80**
2000	**30,90**	**37,70**	**17,31**	**29,77**	**10,54**	**23,40**	**6,84**	**18,61**	**4,76**	**15,33**	**3,40**	**12,66**
2500	**30,85**	**37,64**	**17,08**	**29,38**	**10,42**	**23,14**	**6,77**	**18,41**	**4,71**	**15,16**	**3,37**	**12,52**
3000	**30,84**	**37,62**	**16,94**	**29,14**	**10,31**	**22,88**	**6,70**	**18,21**	**4,66**	**15,01**	**3,33**	**12,39**
3500	**29,33**	**35,79**	**16,66**	**28,66**	**10,22**	**22,69**	**6,68**	**18,16**	**4,62**	**14,86**	**3,30**	**12,27**

q_z [kN/m] as permanent load over L.

Point Load

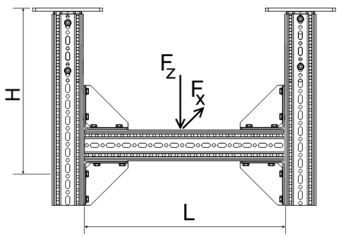

H_{max} \ L_{max}	1500		2000		2500		3000		3500		4000	
	$F_{z.\,perm}$ for		$F_{z.\,perm}$ for		$F_{z.\,perm}$ for		$F_{z.\,perm}$ for		$F_{z.\,perm}$ for		$F_{z.\,perm}$ for	
	$F_x = 0$	$F_x = \mu_0 * F_z$	$F_x = 0$	$F_x = \mu_0 * F_z$	$F_x = 0$	$F_x = \mu_0 * F_z$	$F_x = 0$	$F_x = \mu_0 * F_z$	$F_x = 0$	$F_x = \mu_0 * F_z$	$F_x = 0$	$F_x = \mu_0 * F_z$
[mm]	[kN]	[kN]	[kN]	[kN]	[kN]	[kN]	[kN]	[kN]	[kN]	[kN]	[kN]	[kN]
1500	**24,88**	**8,49**	**19,56**	**8,38**	**16,19**	**8,27**	**13,00**	**8,16**	**10,42**	**8,03**	**8,51**	**7,87**
2000	**24,50**	**6,44**	**19,26**	**6,36**	**15,93**	**6,28**	**12,61**	**6,19**	**10,10**	**6,09**	**8,24**	**5,99**
2500	**24,16**	**5,20**	**18,98**	**5,14**	**15,60**	**5,08**	**12,25**	**5,01**	**9,81**	**4,93**	**8,00**	**4,86**
3000	**23,86**	**4,36**	**18,73**	**4,32**	**15,22**	**4,27**	**11,95**	**4,21**	**9,55**	**4,15**	**7,78**	**4,09**
3500	**23,59**	**3,76**	**18,51**	**3,72**	**14,89**	**3,68**	**11,67**	**3,64**	**9,32**	**3,59**	**7,59**	**3,54**

F_z [kN] as a permanent load at distance L/2. F_x [kN] as a variable load at distance L/2.

2 Point Loads

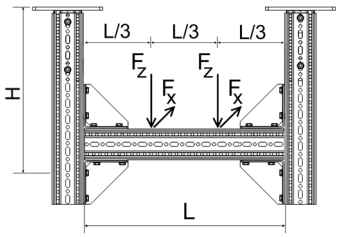

H_{max} \ L_{max}	1500		2000		2500		3000		3500		4000	
	$F_{z.\,perm}$ for		$F_{z.\,perm}$ for		$F_{z.\,perm}$ for		$F_{z.\,perm}$ for		$F_{z.\,perm}$ for		$F_{z.\,perm}$ for	
	$F_x = 0$	$F_x = \mu_0 * F_z$	$F_x = 0$	$F_x = \mu_0 * F_z$	$F_x = 0$	$F_x = \mu_0 * F_z$	$F_x = 0$	$F_x = \mu_0 * F_z$	$F_x = 0$	$F_x = \mu_0 * F_z$	$F_x = 0$	$F_x = \mu_0 * F_z$
[mm]	[kN]	[kN]	[kN]	[kN]	[kN]	[kN]	[kN]	[kN]	[kN]	[kN]	[kN]	[kN]
1500	**17,14**	**4,26**	**12,75**	**4,22**	**9,64**	**4,17**	**7,58**	**4,12**	**6,10**	**4,06**	**5,02**	**4,01**
2000	**16,73**	**3,23**	**12,60**	**3,20**	**9,54**	**3,16**	**7,50**	**3,12**	**6,04**	**3,08**	**4,97**	**3,03**
2500	**16,49**	**2,61**	**12,55**	**2,58**	**9,44**	**2,55**	**7,42**	**2,52**	**5,98**	**2,49**	**4,92**	**2,45**
3000	**16,17**	**2,18**	**12,55**	**2,16**	**9,34**	**2,14**	**7,35**	**2,11**	**5,92**	**2,09**	**4,88**	**2,06**
3500	**16,04**	**1,88**	**12,19**	**1,86**	**9,23**	**1,85**	**7,31**	**1,83**	**5,87**	**1,80**	**4,83**	**1,78**

F_z [kN] as permanent loads at distance 2*L/3 and L/3. F_x [kN] as variable loads at distance 2*L/3 and L/3.

3 Point Loads

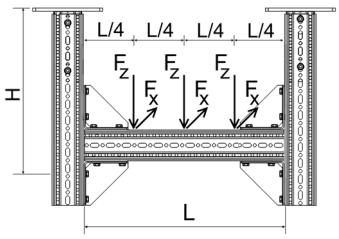

H_{max} \ L_{max}	1500		2000		2500		3000		3500		4000	
	$F_{z.\,perm}$ for		$F_{z.\,perm}$ for		$F_{z.\,perm}$ for		$F_{z.\,perm}$ for		$F_{z.\,perm}$ for		$F_{z.\,perm}$ for	
	$F_x = 0$	$F_x = \mu_0 * F_z$	$F_x = 0$	$F_x = \mu_0 * F_z$	$F_x = 0$	$F_x = \mu_0 * F_z$	$F_x = 0$	$F_x = \mu_0 * F_z$	$F_x = 0$	$F_x = \mu_0 * F_z$	$F_x = 0$	$F_x = \mu_0 * F_z$
[mm]	[kN]	[kN]	[kN]	[kN]	[kN]	[kN]	[kN]	[kN]	[kN]	[kN]	[kN]	[kN]
1500	**11,68**	**2,84**	**8,92**	**2,82**	**6,89**	**2,79**	**5,45**	**2,75**	**4,34**	**2,72**	**3,58**	**2,68**
2000	**11,51**	**2,16**	**8,81**	**2,13**	**6,82**	**2,11**	**5,39**	**2,09**	**4,29**	**2,06**	**3,54**	**2,03**
2500	**11,32**	**1,74**	**8,71**	**1,72**	**6,75**	**1,70**	**5,34**	**1,68**	**4,25**	**1,66**	**3,50**	**1,64**
3000	**11,12**	**1,46**	**8,59**	**1,44**	**6,66**	**1,43**	**5,27**	**1,41**	**4,21**	**1,40**	**3,47**	**1,38**
3500	**10,96**	**1,26**	**8,49**	**1,24**	**6,60**	**1,23**	**5,22**	**1,22**	**4,17**	**1,21**	**3,44**	**1,19**

F_z [kN] as permanent loads at distance 3*L/4. L/2 and L/4. F_x [kN] as variable loads at distance 3*L/4. L/2 and L/4.

All illustrated structures are able to be installed standing as well.
Friction coefficient $\mu_0 = 0{,}2$ for friction in longitudinal direction. Max. deviation H/100; L/200.

Working loads in accordance with Eurocode 3

Joining Beam Bracket F 100 horizontal

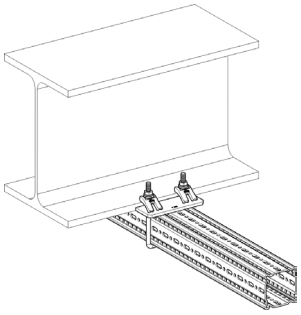

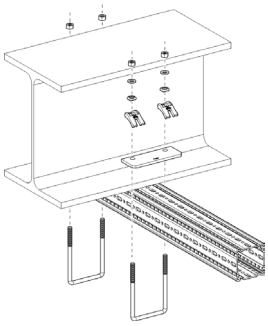

Part List
1 x Beam Section TP F 100
2 x U-Holder SB F 100-40

Distributed Load

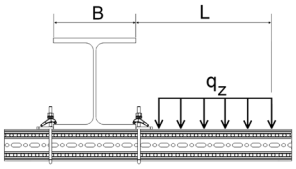

B_{max} \ L_{max}	300		500		700		900		1100	
	$q_{z.\,perm}$	F_z (q_z * L)	$q_{z.\,perm}$	F_z (q_z * L)	$q_{z.\,perm}$	F_z (q_z * L)	$q_{z.\,perm}$	F_z (q_z * L)	$q_{z.\,perm}$	F_z (q_z * L)
[mm]	[kN/m]	[kN]	[kN/m]	[kN]	[kN/m]	[kN]	[kN/m]	[kN]	[kN/m]	[kN]
100	**16,15**	**4,85**	**6,32**	**3,16**	**3,37**	**2,36**	**2,08**	**1,87**	**1,40**	**1,54**
150	**22,95**	**6,88**	**9,39**	**4,70**	**5,16**	**3,61**	**3,26**	**2,94**	**2,24**	**2,47**
200	**27,90**	**8,37**	**11,82**	**5,91**	**6,64**	**4,65**	**4,27**	**3,84**	**2,97**	**3,27**
250	**31,67**	**9,50**	**13,77**	**6,89**	**7,88**	**5,51**	**5,13**	**4,62**	**3,61**	**3,97**
300	**34,64**	**10,39**	**15,38**	**7,69**	**8,93**	**6,25**	**5,88**	**5,30**	**4,18**	**4,60**

q_z [kN/m] as permanent load over L.

Point Load

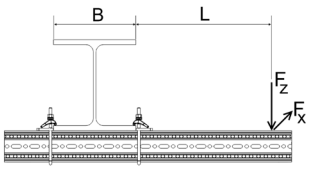

B_{max} \ L_{max}	300		500		700		900		1100	
	$F_{z.\,perm}$ for		$F_{z.\,perm}$ for		$F_{z.\,perm}$ for		$F_{z.\,perm}$ for		$F_{z.\,perm}$ for	
	$F_x = 0$	$F_x = \mu_0 * F_z$	$F_x = 0$	$F_x = \mu_0 * F_z$	$F_x = 0$	$F_x = \mu_0 * F_z$	$F_x = 0$	$F_x = \mu_0 * F_z$	$F_x = 0$	$F_x = \mu_0 * F_z$
[mm]	[kN]	[kN]	[kN]	[kN]	[kN]	[kN]	[kN]	[kN]	[kN]	[kN]
100	**2,65**	**1,26**	**1,74**	**0,82**	**1,29**	**0,61**	**1,02**	**0,49**	**0,84**	**0,40**
150	**3,94**	**1,87**	**2,70**	**1,28**	**2,05**	**0,97**	**1,65**	**0,78**	**1,37**	**0,65**
200	**4,98**	**2,36**	**3,52**	**1,67**	**2,72**	**1,29**	**2,21**	**1,05**	**1,86**	**0,88**
250	**5,82**	**2,76**	**4,23**	**2,01**	**3,32**	**1,58**	**2,73**	**1,30**	**2,32**	**1,10**
300	**6,51**	**3,09**	**4,85**	**2,30**	**3,86**	**1,83**	**3,20**	**1,52**	**2,74**	**1,30**

F_z [kN] as a permanent load at distance L. F_x [kN] as a variable load at distance L.

2 Point Loads

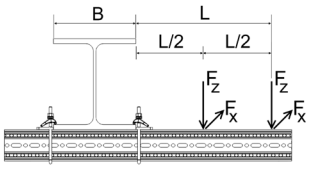

B_{max} \ L_{max}	300		500		700		900		1100	
	$F_{z.\,perm}$ for		$F_{z.\,perm}$ for		$F_{z.\,perm}$ for		$F_{z.\,perm}$ for		$F_{z.\,perm}$ for	
	$F_x = 0$	$F_x = \mu_0 * F_z$	$F_x = 0$	$F_x = \mu_0 * F_z$	$F_x = 0$	$F_x = \mu_0 * F_z$	$F_x = 0$	$F_x = \mu_0 * F_z$	$F_x = 0$	$F_x = \mu_0 * F_z$
[mm]	[kN]	[kN]	[kN]	[kN]	[kN]	[kN]	[kN]	[kN]	[kN]	[kN]
100	**1,64**	**0,78**	**1,10**	**0,52**	**0,83**	**0,39**	**0,66**	**0,31**	**0,55**	**0,26**
150	**2,38**	**1,13**	**1,68**	**0,80**	**1,29**	**0,61**	**1,05**	**0,50**	**0,88**	**0,42**
200	**2,94**	**1,39**	**2,15**	**1,02**	**1,69**	**0,80**	**1,39**	**0,66**	**1,18**	**0,56**
250	**3,38**	**1,60**	**2,55**	**1,21**	**2,04**	**0,97**	**1,70**	**0,81**	**1,46**	**0,69**
300	**3,73**	**1,77**	**2,88**	**1,37**	**2,35**	**1,11**	**1,98**	**0,94**	**1,70**	**0,81**

F_z [kN] as permanent loads at distance L and L/2. F_x [kN] as variable loads at distance L and L/2.

3 Point Loads

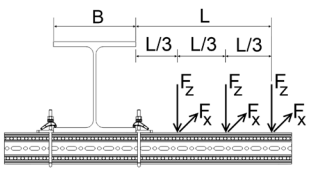

B_{max} \ L_{max}	300		500		700		900		1100	
	$F_{z.\,perm}$ for		$F_{z.\,perm}$ for		$F_{z.\,perm}$ for		$F_{z.\,perm}$ for		$F_{z.\,perm}$ for	
	$F_x = 0$	$F_x = \mu_0 * F_z$	$F_x = 0$	$F_x = \mu_0 * F_z$	$F_x = 0$	$F_x = \mu_0 * F_z$	$F_x = 0$	$F_x = \mu_0 * F_z$	$F_x = 0$	$F_x = \mu_0 * F_z$
[mm]	[kN]	[kN]	[kN]	[kN]	[kN]	[kN]	[kN]	[kN]	[kN]	[kN]
100	**1,19**	**0,57**	**0,81**	**0,39**	**0,61**	**0,29**	**0,49**	**0,24**	**0,40**	**0,20**
150	**1,70**	**0,81**	**1,22**	**0,58**	**0,94**	**0,45**	**0,77**	**0,37**	**0,65**	**0,31**
200	**2,09**	**0,99**	**1,55**	**0,74**	**1,23**	**0,59**	**1,02**	**0,49**	**0,87**	**0,42**
250	**2,38**	**1,13**	**1,82**	**0,87**	**1,47**	**0,70**	**1,23**	**0,59**	**1,06**	**0,51**
300	**2,61**	**1,24**	**2,05**	**0,97**	**1,68**	**0,80**	**1,43**	**0,68**	**1,24**	**0,59**

F_z [kN] as permanent loads at distance L. 2*L/3 and L/3. F_x [kN] as variable loads at distance L. 2*L/3 and L/3.

Friction coefficient $\mu_0 = 0{,}2$ for friction in longitudinal direction. Max. deviation L/100.

Working loads in accordance with Eurocode 3

Joining Beam Bracket F 100 vertical

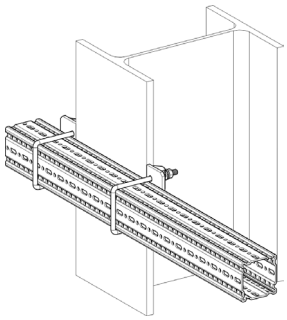

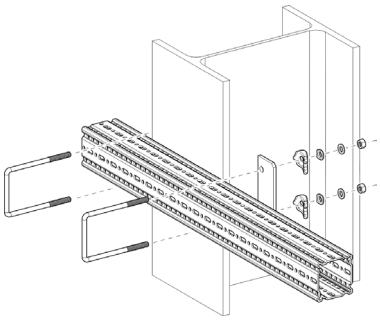

Part List
1 x Beam Section TP F 100
2 x U-Holder SB F 100-40

Distributed Load

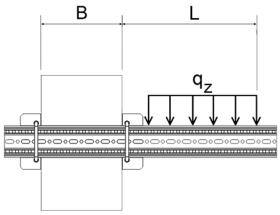

B_{max} \ L_{max}	300		500		700		900		1100	
	$q_{z.\,perm}$	F_z (q_z * L)	$q_{z.\,perm}$	F_z (q_z * L)	$q_{z.\,perm}$	F_z (q_z * L)	$q_{z.\,perm}$	F_z (q_z * L)	$q_{z.\,perm}$	F_z (q_z * L)
[mm]	[kN/m]	[kN]	[kN/m]	[kN]	[kN/m]	[kN]	[kN/m]	[kN]	[kN/m]	[kN]
100	**4,46**	**1,34**	**1,85**	**0,93**	**1,00**	**0,70**	**0,61**	**0,55**	**0,41**	**0,45**
150	**6,21**	**1,86**	**2,73**	**1,37**	**1,53**	**1,07**	**0,97**	**0,87**	**0,66**	**0,73**
200	**7,44**	**2,23**	**3,42**	**1,71**	**1,96**	**1,38**	**1,27**	**1,14**	**0,88**	**0,97**
250	**8,35**	**2,50**	**3,96**	**1,98**	**2,33**	**1,63**	**1,53**	**1,38**	**1,08**	**1,19**
300	**9,05**	**2,72**	**4,40**	**2,20**	**2,63**	**1,84**	**1,75**	**1,58**	**1,25**	**1,37**

q_z [kN/m] as permanent load over L.

Point Load

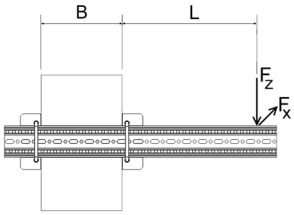

B_{max} \ L_{max}	300		500		700		900		1100	
	$F_{z.\,perm}$ for		$F_{z.\,perm}$ for		$F_{z.\,perm}$ for		$F_{z.\,perm}$ for		$F_{z.\,perm}$ for	
	$F_x = 0$	$F_x = \mu_0 * F_z$	$F_x = 0$	$F_x = \mu_0 * F_z$	$F_x = 0$	$F_x = \mu_0 * F_z$	$F_x = 0$	$F_x = \mu_0 * F_z$	$F_x = 0$	$F_x = \mu_0 * F_z$
[mm]	[kN]	[kN]	[kN]	[kN]	[kN]	[kN]	[kN]	[kN]	[kN]	[kN]
100	**0,82**	**0,78**	**0,53**	**0,51**	**0,39**	**0,37**	**0,30**	**0,29**	**0,24**	**0,23**
150	**1,22**	**1,17**	**0,83**	**0,79**	**0,62**	**0,60**	**0,49**	**0,47**	**0,40**	**0,39**
200	**1,54**	**1,48**	**1,09**	**1,04**	**0,83**	**0,80**	**0,67**	**0,64**	**0,56**	**0,53**
250	**1,80**	**1,73**	**1,31**	**1,25**	**1,02**	**0,98**	**0,83**	**0,80**	**0,70**	**0,67**
300	**2,02**	**1,94**	**1,50**	**1,44**	**1,19**	**1,14**	**0,98**	**0,94**	**0,83**	**0,79**

F_z [kN] as a permanent load at distance L. F_x [kN] as a variable load at distance L.

2 Point Loads

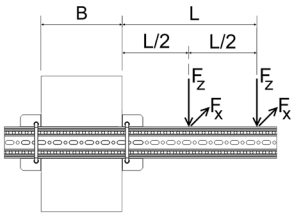

B_{max} \ L_{max}	300		500		700		900		1100	
	$F_{z.\,perm}$ for		$F_{z.\,perm}$ for		$F_{z.\,perm}$ for		$F_{z.\,perm}$ for		$F_{z.\,perm}$ for	
	$F_x = 0$	$F_x = \mu_0 * F_z$	$F_x = 0$	$F_x = \mu_0 * F_z$	$F_x = 0$	$F_x = \mu_0 * F_z$	$F_x = 0$	$F_x = \mu_0 * F_z$	$F_x = 0$	$F_x = \mu_0 * F_z$
[mm]	[kN]	[kN]	[kN]	[kN]	[kN]	[kN]	[kN]	[kN]	[kN]	[kN]
100	**0,51**	**0,49**	**0,34**	**0,32**	**0,25**	**0,24**	**0,19**	**0,19**	**0,16**	**0,15**
150	**0,74**	**0,71**	**0,52**	**0,49**	**0,39**	**0,38**	**0,32**	**0,30**	**0,26**	**0,25**
200	**0,91**	**0,87**	**0,66**	**0,64**	**0,52**	**0,50**	**0,42**	**0,40**	**0,35**	**0,34**
250	**1,05**	**1,00**	**0,79**	**0,75**	**0,63**	**0,60**	**0,52**	**0,50**	**0,44**	**0,42**
300	**1,16**	**1,11**	**0,89**	**0,85**	**0,72**	**0,69**	**0,60**	**0,58**	**0,52**	**0,49**

F_z [kN] as permanent loads at distance L and L/2. F_x [kN] as variable loads at distance L and L/2.

3 Point Loads

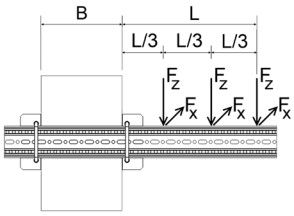

B_{max} \ L_{max}	300		500		700		900		1100	
	$F_{z.\,perm}$ for		$F_{z.\,perm}$ for		$F_{z.\,perm}$ for		$F_{z.\,perm}$ for		$F_{z.\,perm}$ for	
	$F_x = 0$	$F_x = \mu_0 * F_z$	$F_x = 0$	$F_x = \mu_0 * F_z$	$F_x = 0$	$F_x = \mu_0 * F_z$	$F_x = 0$	$F_x = \mu_0 * F_z$	$F_x = 0$	$F_x = \mu_0 * F_z$
[mm]	[kN]	[kN]	[kN]	[kN]	[kN]	[kN]	[kN]	[kN]	[kN]	[kN]
100	**0,37**	**0,35**	**0,25**	**0,24**	**0,18**	**0,18**	**0,14**	**0,14**	**0,12**	**0,11**
150	**0,53**	**0,51**	**0,37**	**0,36**	**0,29**	**0,28**	**0,23**	**0,22**	**0,19**	**0,18**
200	**0,65**	**0,62**	**0,48**	**0,46**	**0,38**	**0,36**	**0,31**	**0,30**	**0,26**	**0,25**
250	**0,74**	**0,71**	**0,56**	**0,54**	**0,45**	**0,43**	**0,38**	**0,36**	**0,32**	**0,31**
300	**0,81**	**0,78**	**0,63**	**0,61**	**0,52**	**0,50**	**0,44**	**0,42**	**0,38**	**0,36**

F_z [kN] as permanent loads at distance L. 2*L/3 and L/3. F_x [kN] as variable loads at distance L. 2*L/3 and L/3.

Friction coefficient $\mu_0 = 0{,}2$ for friction in longitudinal direction. Max. deviation L/100.

Working loads in accordance with Eurocode 3

Beam Bracket F 100 - Variant a) clamped

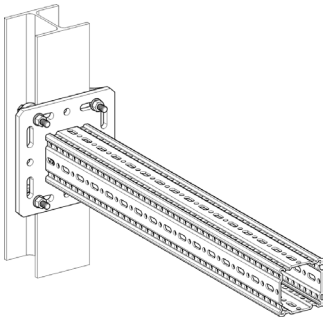

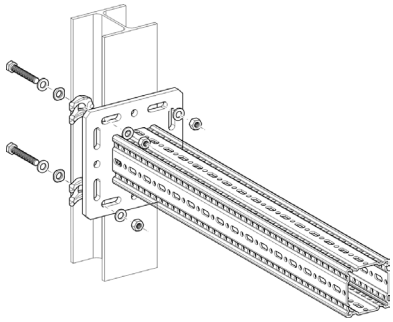

Part List
1 x Beam Bracket TKO F 100
1 x Assembly Set MS 5P M12 S

Distributed Load

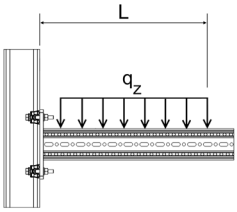

L_{max}	$q_{z.\ perm}$	F_z ($q_{z.\ perm}$ * L)
[mm]	[kN/m]	[kN]
300	**54,99**	**16,50**
500	**28,59**	**14,30**
700	**14,59**	**10,21**
900	**8,83**	**7,94**
1100	**5,91**	**6,50**

q_z [kN/m] as permanent load over L.

Point Load

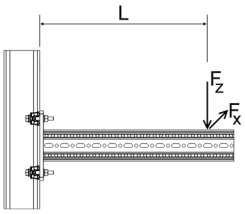

	$F_{z.\ perm}$ for	
L_{max}	$F_x = 0$	$F_x = \mu_0 * F_z$
[mm]	[kN]	[kN]
300	**11,91**	**7,40**
500	**7,15**	**4,44**
700	**5,11**	**3,17**
900	**3,97**	**2,47**
1100	**3,25**	**2,02**

F_z [kN] as a permanent load at distance L. F_x [kN] as a variable load at distance L.

2 Point Loads

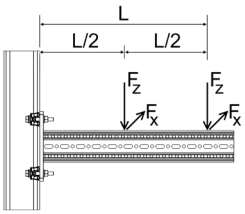

	$F_{z.\ perm}$ for	
L_{max}	$F_x = 0$	$F_x = \mu_0 * F_z$
[mm]	[kN]	[kN]
300	**7,94**	**4,93**
500	**4,77**	**2,96**
700	**3,40**	**2,11**
900	**2,65**	**1,64**
1100	**2,17**	**1,34**

F_z [kN] as permanent loads at distance L and L/2. F_x [kN] as variable loads at distance L and L/2.

3 Point Loads

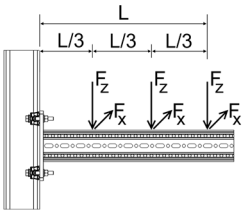

	$F_{z.\ perm}$ for	
L_{max}	$F_x = 0$	$F_x = \mu_0 * F_z$
[mm]	[kN]	[kN]
300	**5,96**	**3,70**
500	**3,57**	**2,22**
700	**2,55**	**1,58**
900	**1,99**	**1,23**
1100	**1,62**	**1,01**

F_z [kN] as permanent loads at distance L. 2*L/3 and L/3. F_x [kN] as variable loads at distance L. 2*L/3 and L/3.

Friction coefficient μ_0 = 0,2 for friction in longitudinal direction. Max. deviation L/100.

Working loads in accordance with Eurocode 3

Beam Bracket F 100 - Variant b) anchored

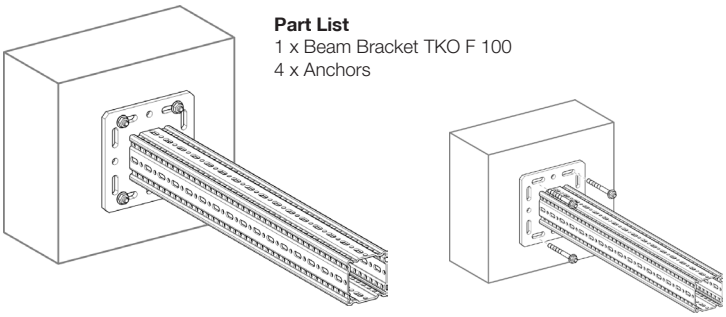

Part List
1 x Beam Bracket TKO F 100
4 x Anchors

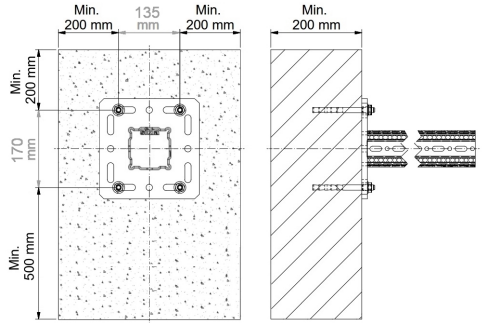

Distributed Load

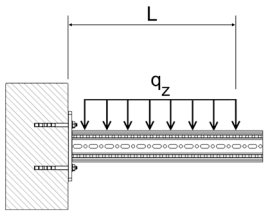

Anchor / L_{max}	Bolt Anchor AN BZ plus M12 hef. 70		Bolt Anchor AN BZ3 M12 hef. 125		Injection system VMZ-A M12x125	
	$q_{z,\,perm}$	F_z ($q_{z,\,perm}$ * L)	$q_{z,\,perm}$	F_z ($q_{z,\,perm}$ * L)	$q_{z,\,perm}$	F_z ($q_{z,\,perm}$ * L)
[mm]	[kN/m]	[kN]	[kN/m]	[kN]	[kN/m]	[kN]
300	**29,61**	**8,88**	**35,19**	**10,56**	**38,87**	**11,66**
500	**14,14**	**7,07**	**17,29**	**8,64**	**20,22**	**10,11**
700	**8,39**	**5,87**	**10,45**	**7,32**	**12,75**	**8,92**
900	**5,58**	**5,02**	**7,05**	**6,34**	**8,87**	**7,99**
1100	**3,98**	**4,38**	**5,09**	**5,60**	**6,57**	**7,23**

q_z [kN/m] as permanent load over L.

Point Load

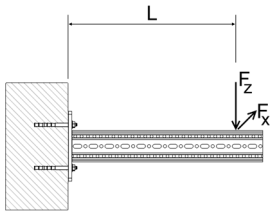

Anchor / L_{max}	Bolt Anchor AN BZ plus M12 hef. 70		Bolt Anchor AN BZ3 M12 hef. 125		Injection system VMZ-A M12x125	
	$F_{z,\,perm}$ for		$F_{z,\,perm}$ for		$F_{z,\,perm}$ for	
	$F_x = 0$	$F_x = \mu_0 * F_z$	$F_x = 0$	$F_x = \mu_0 * F_z$	$F_x = 0$	$F_x = \mu_0 * F_z$
[mm]	[kN]	[kN]	[kN]	[kN]	[kN]	[kN]
300	**6,41**	**6,41**	**7,93**	**7,93**	**9,48**	**9,48**
500	**4,68**	**4,68**	**5,95**	**5,95**	**7,59**	**7,59**
700	**3,68**	**3,68**	**4,76**	**4,76**	**6,32**	**6,32**
900	**2,93**	**2,93**	**3,80**	**3,80**	**5,09**	**5,09**
1100	**2,39**	**2,39**	**3,11**	**3,11**	**4,17**	**4,17**

F_z [kN] as a permanent load at distance L. F_x [kN] as a variable load at distance L.

2 Point Loads

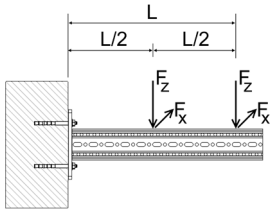

Anchor / L_{max}	Bolt Anchor AN BZ plus M12 hef. 70		Bolt Anchor AN BZ3 M12 hef. 125		Injection system VMZ-A M12x125	
	$F_{z,\,perm}$ for		$F_{z,\,perm}$ for		$F_{z,\,perm}$ for	
	$F_x = 0$	$F_x = \mu_0 * F_z$	$F_x = 0$	$F_x = \mu_0 * F_z$	$F_x = 0$	$F_x = \mu_0 * F_z$
[mm]	[kN]	[kN]	[kN]	[kN]	[kN]	[kN]
300	**3,72**	**3,72**	**4,53**	**4,53**	**5,23**	**5,23**
500	**2,82**	**2,82**	**3,52**	**3,52**	**4,33**	**4,33**
700	**2,26**	**2,26**	**2,88**	**2,88**	**3,70**	**3,70**
900	**1,89**	**1,89**	**2,44**	**2,44**	**3,23**	**3,23**
1100	**1,60**	**1,60**	**2,07**	**2,07**	**2,78**	**2,78**

F_z [kN] as permanent loads at distance L and L/2. F_x [kN] as variable loads at distance L and L/2.

3 Point Loads

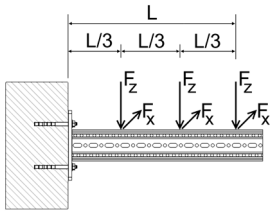

Anchor / L_{max}	Bolt Anchor AN BZ plus M12 hef. 70		Bolt Anchor AN BZ3 M12 hef. 125		Injection system VMZ-A M12x125	
	$F_{z,\,perm}$ for		$F_{z,\,perm}$ for		$F_{z,\,perm}$ for	
	$F_x = 0$	$F_x = \mu_0 * F_z$	$F_x = 0$	$F_x = \mu_0 * F_z$	$F_x = 0$	$F_x = \mu_0 * F_z$
[mm]	[kN]	[kN]	[kN]	[kN]	[kN]	[kN]
300	**2,62**	**2,62**	**3,17**	**3,17**	**3,61**	**3,61**
500	**2,01**	**2,01**	**2,50**	**2,50**	**3,03**	**3,03**
700	**1,63**	**1,63**	**2,07**	**2,07**	**2,62**	**2,62**
900	**1,37**	**1,37**	**1,76**	**1,76**	**2,30**	**2,30**
1100	**1,19**	**1,19**	**1,54**	**1,54**	**2,05**	**2,05**

F_z [kN] as permanent loads at distance L. 2*L/3 and L/3. F_x [kN] as variable loads at distance L. 2*L/3 and L/3.

Friction coefficient μ_0 = 0,2 for friction in longitudinal direction. Max. deviation L/100.
ax. permissible anchor loads according to EN 1992-4; Material: Steel galvanised. Cracked concrete C20/25 f_{ck} = 20 N/mm.
Min. component thickness and edge distances to be respected.

Working loads in accordance with Eurocode 3

Beam Section TP F 100/160

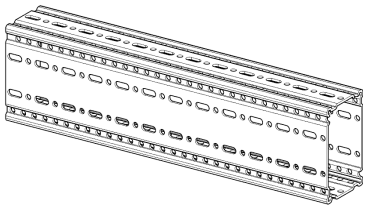

Single-span beam with uniaxial load

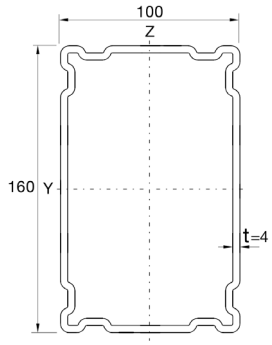

Distributed Load

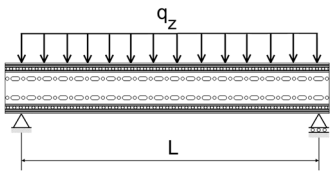

L_{max}	$q_{z.\ perm}$	F_z ($q_{z.\ perm}$ * L)
[mm]	[kN/m]	[kN]
1000	**64,94**	**64,94**
2000	**32,13**	**64,26**
3000	**14,20**	**42,60**
4000	**6,76**	**27,04**
5000	**3,39**	**16,97**
6000	**1,90**	**11,43**

q_z [kN/m] as permanent load over L.

Point Load

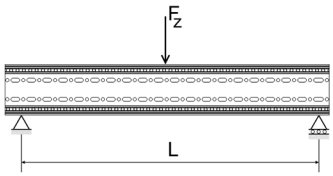

L_{max}	$F_{z.\ perm}$
[mm]	[kN]
1000	**64,47**
2000	**32,13**
3000	**21,30**
4000	**15,85**
5000	**10,60**
6000	**7,14**

F_z [kN] as a permanent load at L/2.

2 Point Loads

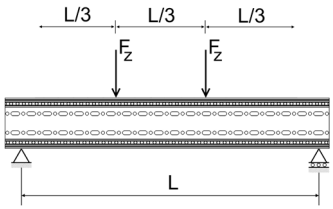

L_{max}	$F_{z.\ perm}$
[mm]	[kN]
1000	**32,47**
2000	**24,10**
3000	**15,98**
4000	**9,92**
5000	**6,22**
6000	**4,19**

F_z [kN] as permanent loads at L/3 and 2*L/3.

3 Point Loads

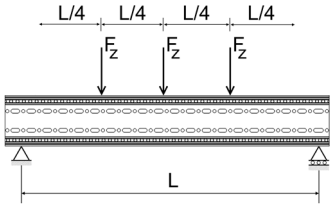

L_{max}	$F_{z.\ perm}$
[mm]	[kN]
1000	**21,65**
2000	**16,06**
3000	**10,65**
4000	**7,12**
5000	**4,46**
6000	**3,01**

F_z [kN] as permanent loads at L/4. L/2 and 3*L/4.

Max. bending L/200.
Dead weight of the profile is considered.

Working loads in accordance with Eurocode 3

L-Construction F 100/160 / STA

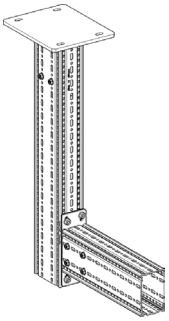

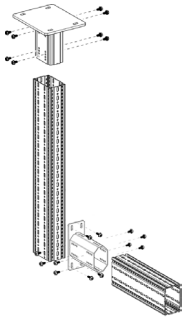

Part List
1 x End Support WBD-4KT 121/160-F100/160
2 x Beam Section TP F 100/160
1 x End Support STA F 100 - 100/160
20 x Self-Forming-Screw FLS F

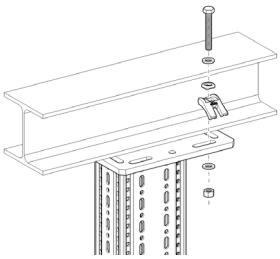

Note:
Unless otherwise stated, the information is based on installation using the Assembly Set MS 5P M12 S. If fixings are done using anchors, these must be verified separately.

Distributed Load

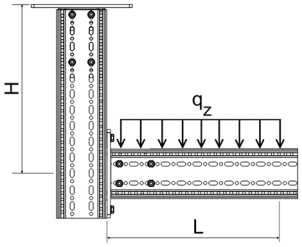

H_{max} \ L_{max}	500		700		900		1100		1300	
	$q_{z,\,perm}$	F_z (q_z * L)	$q_{z,\,perm}$	F_z (q_z * L)	$q_{z,\,perm}$	F_z (q_z * L)	$q_{z,\,perm}$	F_z (q_z * L)	$q_{z,\,perm}$	F_z (q_z * L)
[mm]	[kN/m]	[kN]	[kN/m]	[kN]	[kN/m]	[kN]	[kN/m]	[kN]	[kN/m]	[kN]
1000	**10,94**	**3,94**	**5,90**	**3,30**	**3,66**	**2,78**	**2,47**	**2,37**	**1,77**	**2,05**
2000	**9,22**	**3,32**	**5,01**	**2,80**	**3,11**	**2,36**	**2,10**	**2,02**	**1,50**	**1,74**
3000	**7,97**	**2,87**	**4,34**	**2,43**	**2,70**	**2,05**	**1,83**	**1,75**	**1,30**	**1,51**
4000	**7,01**	**2,52**	**3,83**	**2,15**	**2,39**	**1,81**	**1,61**	**1,55**	**1,15**	**1,33**

q_z [kN/m] as permanent load over L.

Point Load

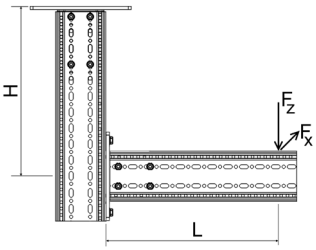

H_{max} \ L_{max}	500		700		900		1100		1300	
	$F_{z,\,perm}$ for		$F_{z,\,perm}$ for		$F_{z,\,perm}$ for		$F_{z,\,perm}$ for		$F_{z,\,perm}$ for	
	$F_x = 0$	$F_x = \mu_0 * F_z$	$F_x = 0$	$F_x = \mu_0 * F_z$	$F_x = 0$	$F_x = \mu_0 * F_z$	$F_x = 0$	$F_x = \mu_0 * F_z$	$F_x = 0$	$F_x = \mu_0 * F_z$
[mm]	[kN]	[kN]	[kN]	[kN]	[kN]	[kN]	[kN]	[kN]	[kN]	[kN]
1000	**2,94**	**2,79**	**2,17**	**2,14**	**1,70**	**1,70**	**1,39**	**1,39**	**1,17**	**1,17**
2000	**2,50**	**2,49**	**1,85**	**1,85**	**1,46**	**1,46**	**1,19**	**1,19**	**1,00**	**1,00**
3000	**2,18**	**2,18**	**1,62**	**1,62**	**1,27**	**1,27**	**1,04**	**1,04**	**0,87**	**0,87**
4000	**1,92**	**1,91**	**1,43**	**1,43**	**1,13**	**1,13**	**0,92**	**0,92**	**0,77**	**0,77**

F_z [kN] as a permanent load at distance L. F_x [kN] as a variable load at distance L.

2 Point Loads

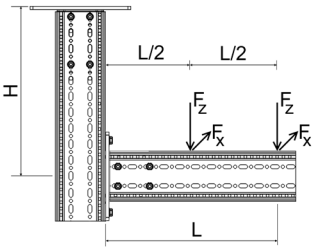

H_{max} \ L_{max}	500		700		900		1100		1300	
	$F_{z,\,perm}$ for		$F_{z,\,perm}$ for		$F_{z,\,perm}$ for		$F_{z,\,perm}$ for		$F_{z,\,perm}$ for	
	$F_x = 0$	$F_x = \mu_0 * F_z$	$F_x = 0$	$F_x = \mu_0 * F_z$	$F_x = 0$	$F_x = \mu_0 * F_z$	$F_x = 0$	$F_x = \mu_0 * F_z$	$F_x = 0$	$F_x = \mu_0 * F_z$
[mm]	[kN]	[kN]	[kN]	[kN]	[kN]	[kN]	[kN]	[kN]	[kN]	[kN]
1000	**1,92**	**1,70**	**1,43**	**1,33**	**1,13**	**1,09**	**0,92**	**0,91**	**0,78**	**0,78**
2000	**1,63**	**1,48**	**1,22**	**1,19**	**0,96**	**0,96**	**0,79**	**0,79**	**0,66**	**0,66**
3000	**1,41**	**1,31**	**1,06**	**1,06**	**0,84**	**0,84**	**0,69**	**0,69**	**0,58**	**0,58**
4000	**1,25**	**0,96**	**0,94**	**0,94**	**0,74**	**0,74**	**0,61**	**0,61**	**0,51**	**0,51**

F_z [kN] as permanent loads at distance L and L/2. F_x [kN] as variable loads at distance L and L/2.

3 Point Loads

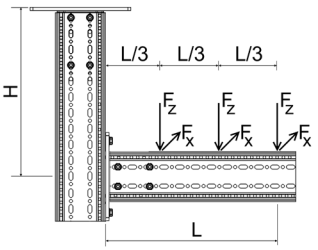

H_{max} \ L_{max}	500		700		900		1100		1300	
	$F_{z,\,perm}$ for		$F_{z,\,perm}$ for		$F_{z,\,perm}$ for		$F_{z,\,perm}$ for		$F_{z,\,perm}$ for	
	$F_x = 0$	$F_x = \mu_0 * F_z$	$F_x = 0$	$F_x = \mu_0 * F_z$	$F_x = 0$	$F_x = \mu_0 * F_z$	$F_x = 0$	$F_x = \mu_0 * F_z$	$F_x = 0$	$F_x = \mu_0 * F_z$
[mm]	[kN]	[kN]	[kN]	[kN]	[kN]	[kN]	[kN]	[kN]	[kN]	[kN]
1000	**1,39**	**1,22**	**1,04**	**0,97**	**0,82**	**0,79**	**0,67**	**0,67**	**0,57**	**0,57**
2000	**1,18**	**1,05**	**0,89**	**0,86**	**0,70**	**0,70**	**0,58**	**0,58**	**0,49**	**0,49**
3000	**1,03**	**0,93**	**0,77**	**0,77**	**0,61**	**0,61**	**0,50**	**0,50**	**0,42**	**0,42**
4000	**0,91**	**0,64**	**0,68**	**0,64**	**0,54**	**0,54**	**0,44**	**0,44**	**0,37**	**0,37**

F_z [kN] as permanent loads at distance L. 2*L/3 and L/3. F_x [kN] as variable loads at distance L. 2*L/3 and L/3.

All illustrated structures are able to be installed standing as well.
Friction coefficient $\mu_0 = 0{,}2$ for friction in longitudinal direction. Max. deviation H/100; L/100.

Working loads in accordance with Eurocode 3

L-Construction F 100/160 / STA-E

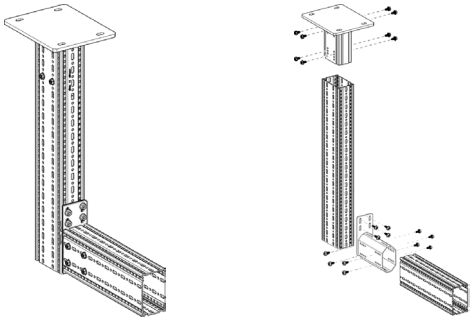

Part List
1 x End Support WBD-4KT 121/160-F100/160
2 x Beam Section TP F 100/160
1 x End Support STA F 100 - 100/160-E
20 x Self-Forming-Screw FLS F

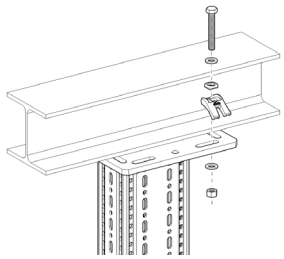

Note:
Unless otherwise stated, the information is based on installation using the Assembly Set MS 5P M12 S. If fixings are done using anchors, these must be verified separately.

Distributed Load

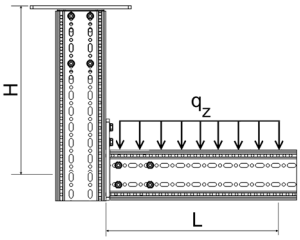

H_{max} \ L_{max}	500		700		900		1100		1300	
	$q_{z.\,perm}$	F_z (q_z * L)	$q_{z.\,perm}$	F_z (q_z * L)	$q_{z.\,perm}$	F_z (q_z * L)	$q_{z.\,perm}$	F_z (q_z * L)	$q_{z.\,perm}$	F_z (q_z * L)
[mm]	[kN/m]	[kN]	[kN/m]	[kN]	[kN/m]	[kN]	[kN/m]	[kN]	[kN/m]	[kN]
1000	**10,30**	**3,71**	**5,54**	**3,10**	**3,43**	**2,60**	**2,31**	**2,22**	**1,65**	**1,92**
2000	**8,77**	**3,16**	**4,74**	**2,66**	**2,94**	**2,24**	**1,98**	**1,91**	**1,42**	**1,64**
3000	**7,63**	**2,75**	**4,14**	**2,32**	**2,57**	**1,96**	**1,74**	**1,67**	**1,24**	**1,44**
4000	**6,74**	**2,43**	**3,67**	**2,06**	**2,28**	**1,74**	**1,54**	**1,48**	**1,10**	**1,27**

q_z [kN/m] as permanent load over L.

Point Load

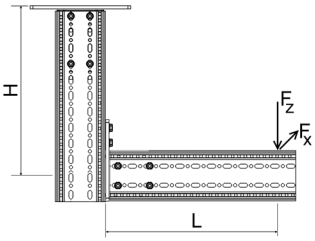

H_{max} \ L_{max}	500		700		900		1100		1300	
	$F_{z.\,perm}$ for		$F_{z.\,perm}$ for		$F_{z.\,perm}$ for		$F_{z.\,perm}$ for		$F_{z.\,perm}$ for	
	$F_x = 0$	$F_x = \mu_0 * F_z$	$F_x = 0$	$F_x = \mu_0 * F_z$	$F_x = 0$	$F_x = \mu_0 * F_z$	$F_x = 0$	$F_x = \mu_0 * F_z$	$F_x = 0$	$F_x = \mu_0 * F_z$
[mm]	[kN]	[kN]	[kN]	[kN]	[kN]	[kN]	[kN]	[kN]	[kN]	[kN]
1000	**2,76**	**2,76**	**2,03**	**2,03**	**1,59**	**1,59**	**1,30**	**1,30**	**1,09**	**1,09**
2000	**2,37**	**2,34**	**1,75**	**1,73**	**1,37**	**1,37**	**1,12**	**1,12**	**0,94**	**0,94**
3000	**2,07**	**1,98**	**1,54**	**1,47**	**1,21**	**1,17**	**0,99**	**0,97**	**0,82**	**0,82**
4000	**1,84**	**1,72**	**1,37**	**1,27**	**1,08**	**1,01**	**0,88**	**0,84**	**0,73**	**0,72**

F_z [kN] as a permanent load at distance L. F_x [kN] as a variable load at distance L.

2 Point Loads

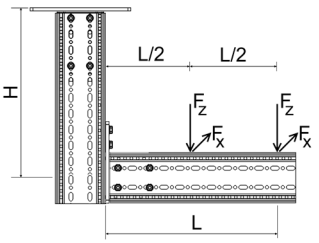

H_{max} \ L_{max}	500		700		900		1100		1300	
	$F_{z.\,perm}$ for		$F_{z.\,perm}$ for		$F_{z.\,perm}$ for		$F_{z.\,perm}$ for		$F_{z.\,perm}$ for	
	$F_x = 0$	$F_x = \mu_0 * F_z$	$F_x = 0$	$F_x = \mu_0 * F_z$	$F_x = 0$	$F_x = \mu_0 * F_z$	$F_x = 0$	$F_x = \mu_0 * F_z$	$F_x = 0$	$F_x = \mu_0 * F_z$
[mm]	[kN]	[kN]	[kN]	[kN]	[kN]	[kN]	[kN]	[kN]	[kN]	[kN]
1000	**1,80**	**1,70**	**1,34**	**1,33**	**1,05**	**1,05**	**0,86**	**0,86**	**0,73**	**0,73**
2000	**1,54**	**1,48**	**1,15**	**1,15**	**0,91**	**0,91**	**0,74**	**0,74**	**0,63**	**0,63**
3000	**1,35**	**1,31**	**1,01**	**0,98**	**0,80**	**0,78**	**0,65**	**0,64**	**0,55**	**0,55**
4000	**1,19**	**0,96**	**0,90**	**0,85**	**0,71**	**0,68**	**0,58**	**0,56**	**0,49**	**0,48**

F_z [kN] as permanent loads at distance L and L/2. F_x [kN] as variable loads at distance L and L/2.

3 Point Loads

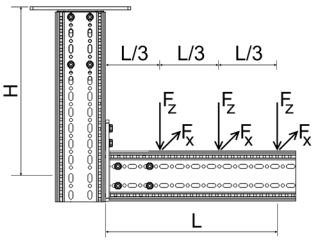

H_{max} \ L_{max}	500		700		900		1100		1300	
	$F_{z.\,perm}$ for		$F_{z.\,perm}$ for		$F_{z.\,perm}$ for		$F_{z.\,perm}$ for		$F_{z.\,perm}$ for	
	$F_x = 0$	$F_x = \mu_0 * F_z$	$F_x = 0$	$F_x = \mu_0 * F_z$	$F_x = 0$	$F_x = \mu_0 * F_z$	$F_x = 0$	$F_x = \mu_0 * F_z$	$F_x = 0$	$F_x = \mu_0 * F_z$
[mm]	[kN]	[kN]	[kN]	[kN]	[kN]	[kN]	[kN]	[kN]	[kN]	[kN]
1000	**1,31**	**1,22**	**0,97**	**0,97**	**0,77**	**0,77**	**0,63**	**0,63**	**0,53**	**0,53**
2000	**1,12**	**1,05**	**0,84**	**0,84**	**0,66**	**0,66**	**0,54**	**0,54**	**0,46**	**0,46**
3000	**0,98**	**0,93**	**0,73**	**0,73**	**0,58**	**0,58**	**0,48**	**0,48**	**0,40**	**0,40**
4000	**0,87**	**0,64**	**0,65**	**0,64**	**0,52**	**0,51**	**0,42**	**0,42**	**0,35**	**0,35**

F_z [kN] as permanent loads at distance L. 2*L/3 and L/3. F_x [kN] as variable loads at distance L. 2*L/3 and L/3.

Friction coefficient μ_0 = 0,2 for friction in longitudinal direction. Max. deviation H/100; L/100.

Working loads in accordance with Eurocode 3

L-Construction F 100/160 / WD

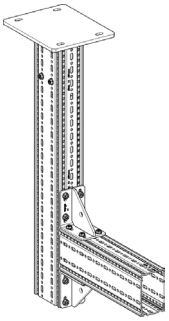

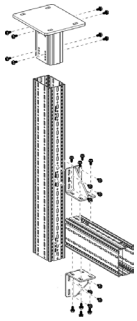

Part List
1 x End Support WBD-4KT 121/160-F100/160
2 x Beam Section TP F 100/160
2 x Corner Bracket WD F 100 140/140
24 x Self-Forming-Screw FLS F

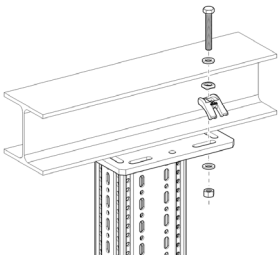

Note:
Unless otherwise stated, the information is based on installation using the Assembly Set MS 5P M12 S. If fixings are done using anchors, these must be verified separately.

Distributed Load

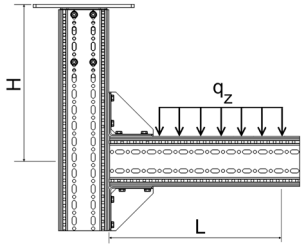

H_{max} \ L_{max}	500		700		900		1100		1300	
	$q_{z,\,perm}$	F_z (q_z * L)	$q_{z,\,perm}$	F_z (q_z * L)	$q_{z,\,perm}$	F_z (q_z * L)	$q_{z,\,perm}$	F_z (q_z * L)	$q_{z,\,perm}$	F_z (q_z * L)
[mm]	[kN/m]	[kN]	[kN/m]	[kN]	[kN/m]	[kN]	[kN/m]	[kN]	[kN/m]	[kN]
1000	**12,73**	**4,58**	**6,55**	**3,67**	**3,99**	**3,04**	**2,68**	**2,57**	**1,91**	**2,22**
2000	**10,86**	**3,91**	**5,66**	**3,17**	**3,46**	**2,63**	**2,32**	**2,22**	**1,65**	**1,91**
3000	**9,35**	**3,37**	**4,88**	**2,73**	**2,98**	**2,27**	**2,00**	**1,92**	**1,42**	**1,64**
4000	**8,21**	**2,95**	**4,28**	**2,40**	**2,62**	**1,99**	**1,75**	**1,68**	**1,24**	**1,44**

q_z [kN/m] as permanent load over L.

Point Load

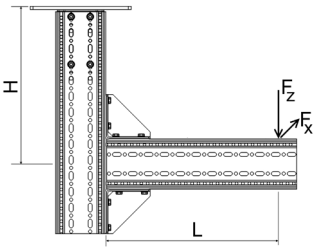

H_{max} \ L_{max}	500		700		900		1100		1300	
	$F_{z,\,perm}$ for		$F_{z,\,perm}$ for		$F_{z,\,perm}$ for		$F_{z,\,perm}$ for		$F_{z,\,perm}$ for	
	$F_x = 0$	$F_x = \mu_0 * F_z$	$F_x = 0$	$F_x = \mu_0 * F_z$	$F_x = 0$	$F_x = \mu_0 * F_z$	$F_x = 0$	$F_x = \mu_0 * F_z$	$F_x = 0$	$F_x = \mu_0 * F_z$
[mm]	[kN]	[kN]	[kN]	[kN]	[kN]	[kN]	[kN]	[kN]	[kN]	[kN]
1000	**3,21**	**2,79**	**2,37**	**2,14**	**1,87**	**1,73**	**1,52**	**1,44**	**1,28**	**1,22**
2000	**2,69**	**2,49**	**2,00**	**1,96**	**1,58**	**1,58**	**1,29**	**1,29**	**1,08**	**1,08**
3000	**2,32**	**2,24**	**1,73**	**1,73**	**1,36**	**1,36**	**1,11**	**1,11**	**0,93**	**0,93**
4000	**2,03**	**1,91**	**1,52**	**1,52**	**1,20**	**1,20**	**0,98**	**0,98**	**0,82**	**0,82**

F_z [kN] as a permanent load at distance L. F_x [kN] as a variable load at distance L.

2 Point Loads

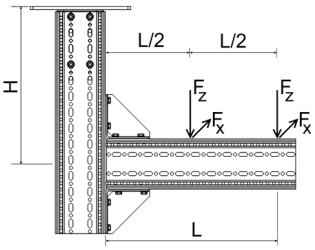

H_{max} \ L_{max}	500		700		900		1100		1300	
	$F_{z,\,perm}$ for		$F_{z,\,perm}$ for		$F_{z,\,perm}$ for		$F_{z,\,perm}$ for		$F_{z,\,perm}$ for	
	$F_x = 0$	$F_x = \mu_0 * F_z$	$F_x = 0$	$F_x = \mu_0 * F_z$	$F_x = 0$	$F_x = \mu_0 * F_z$	$F_x = 0$	$F_x = \mu_0 * F_z$	$F_x = 0$	$F_x = \mu_0 * F_z$
[mm]	[kN]	[kN]	[kN]	[kN]	[kN]	[kN]	[kN]	[kN]	[kN]	[kN]
1000	**2,03**	**1,70**	**1,52**	**1,33**	**1,21**	**1,09**	**1,00**	**0,91**	**0,85**	**0,78**
2000	**1,75**	**1,48**	**1,31**	**1,19**	**1,04**	**0,99**	**0,85**	**0,84**	**0,72**	**0,72**
3000	**1,50**	**1,31**	**1,13**	**1,08**	**0,90**	**0,90**	**0,74**	**0,74**	**0,62**	**0,62**
4000	**1,32**	**0,96**	**0,99**	**0,96**	**0,79**	**0,79**	**0,65**	**0,65**	**0,54**	**0,54**

F_z [kN] as permanent loads at distance L and L/2. F_x [kN] as variable loads at distance L and L/2.

3 Point Loads

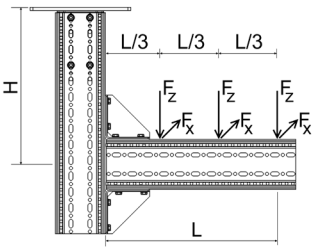

H_{max} \ L_{max}	500		700		900		1100		1300	
	$F_{z,\,perm}$ for		$F_{z,\,perm}$ for		$F_{z,\,perm}$ for		$F_{z,\,perm}$ for		$F_{z,\,perm}$ for	
	$F_x = 0$	$F_x = \mu_0 * F_z$	$F_x = 0$	$F_x = \mu_0 * F_z$	$F_x = 0$	$F_x = \mu_0 * F_z$	$F_x = 0$	$F_x = \mu_0 * F_z$	$F_x = 0$	$F_x = \mu_0 * F_z$
[mm]	[kN]	[kN]	[kN]	[kN]	[kN]	[kN]	[kN]	[kN]	[kN]	[kN]
1000	**1,48**	**1,22**	**1,12**	**0,97**	**0,89**	**0,79**	**0,74**	**0,67**	**0,62**	**0,57**
2000	**1,27**	**1,05**	**0,96**	**0,86**	**0,76**	**0,72**	**0,63**	**0,61**	**0,53**	**0,53**
3000	**1,09**	**0,93**	**0,83**	**0,77**	**0,66**	**0,65**	**0,54**	**0,54**	**0,45**	**0,45**
4000	**0,96**	**0,64**	**0,73**	**0,64**	**0,58**	**0,58**	**0,47**	**0,47**	**0,40**	**0,40**

F_z [kN] as permanent loads at distance L. 2*L/3 and L/3. F_x [kN] as variable loads at distance L. 2*L/3 and L/3.

All illustrated structures are able to be installed standing as well.
Friction coefficient $\mu_0 = 0{,}2$ for friction in longitudinal direction. Max. deviation H/100; L/100.

Working loads in accordance with Eurocode 3

T-Support F 100/160 / STA

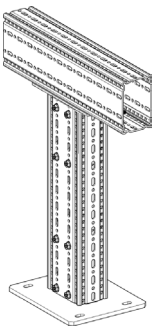

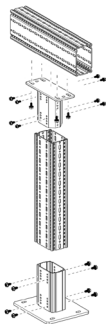

Part List
1 x End Support WBD-4KT 121/160-F100/160
2 x Beam Section TP F 100/160
1 x End Support STA F 100 - 100/160
20 x Self-Forming-Screw FLS F

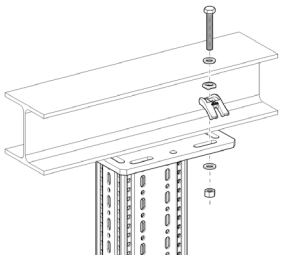

Note:
Unless otherwise stated, the information is based on installation using the Assembly Set MS 5P M12 S. If fixings are done using anchors, these must be verified separately.

Distributed Load - symmetrical

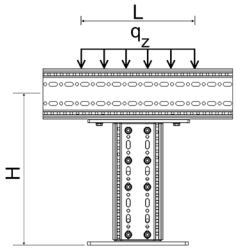

L_{max}	H_{max} = 2 m	
	$q_{z.\ perm}$	F_z ($q_{z.\ perm}$ x L)
[mm]	[kN/m]	[kN]
500	**33,92**	**16,96**
750	**18,86**	**14,14**
1000	**12,11**	**12,11**
1250	**8,45**	**10,57**

q_z [kN/m] as permanent load over L.

Point Load - centrical

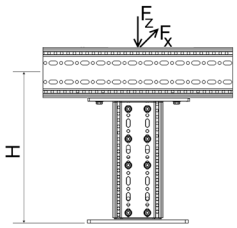

H_{max}	L_{max} = 1 m $F_{z.\ perm}$ for	
	$F_x = 0$	$F_x = \mu_0 * F_z$
[mm]	[kN]	[kN]
500	**21,27**	**14,07**
1000	**21,27**	**6,57**
1500	**21,27**	**4,11**
2000	**21,27**	**2,90**

F_z [kN] as a permanent load. F_x [kN] as a variable load;
Central load introduction for planned eccentricity ± 30 mm.

2 Point Loads

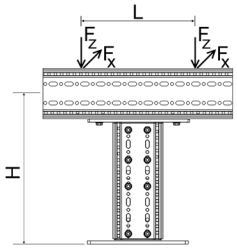

H_{max} \ L_{max}	500 $F_{z.\ perm}$ for		750 $F_{z.\ perm}$ for		1000 $F_{z.\ perm}$ for	
	$F_x = 0$	$F_x = \mu_0 * F_z$	$F_x = 0$	$F_x = \mu_0 * F_z$	$F_x = 0$	$F_x = \mu_0 * F_z$
[mm]	[kN]	[kN]	[kN]	[kN]	[kN]	[kN]
500	**6,09**	**4,93**	**4,74**	**3,94**	**3,88**	**3,28**
1000	**6,09**	**3,29**	**4,74**	**3,29**	**3,88**	**3,28**
1500	**6,09**	**2,05**	**4,74**	**2,05**	**3,88**	**2,05**
2000	**6,09**	**1,45**	**4,74**	**1,45**	**3,88**	**1,45**

F_z [kN] as permanent loads at distance L. F_x [kN] as variable loads at distance L.

3 Point Loads

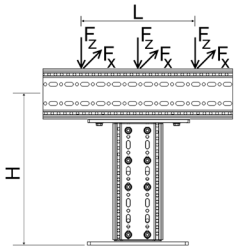

H_{max} \ L_{max}	500 $F_{z.\ perm}$ for		750 $F_{z.\ perm}$ for		1000 $F_{z.\ perm}$ for	
	$F_x = 0$	$F_x = \mu_0 * F_z$	$F_x = 0$	$F_x = \mu_0 * F_z$	$F_x = 0$	$F_x = \mu_0 * F_z$
[mm]	[kN]	[kN]	[kN]	[kN]	[kN]	[kN]
500	**4,99**	**3,91**	**4,05**	**3,07**	**3,40**	**2,53**
1000	**4,99**	**2,19**	**4,05**	**2,19**	**3,40**	**2,19**
1500	**4,99**	**1,37**	**4,05**	**1,37**	**3,40**	**1,37**
2000	**4,99**	**0,97**	**4,05**	**0,97**	**3,40**	**0,97**

F_z [kN] as permanent loads at distance L and L/2. F_x [kN] as variable loads at distance L and L/2.

All illustrated structures are able to be installed standing as well.
Friction coefficient μ_0 = 0,2 for friction in longitudinal direction. Max. Deviation H/150.

Working loads in accordance with Eurocode 3

T-Support F 100/160 / WD

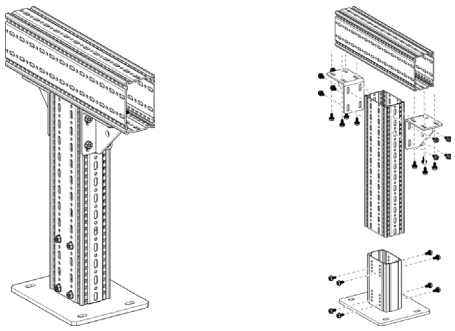

Part List
1 x End Support WBD-4KT 121/160-F100/160
2 x Beam Section TP F 100/160
2 x Corner Bracket WD F 100 140/140
24 x Self-Forming-Screw FLS F

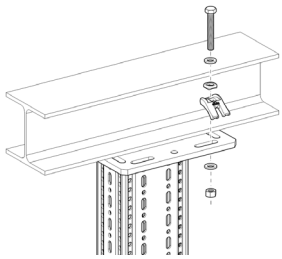

Note:
Unless otherwise stated, the information is based on installation using the Assembly Set MS 5P M12 S. If fixings are done using anchors, these must be verified separately.

Distributed Load - symmetrical

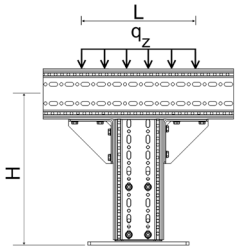

L_{max}	H_{max} = 2 m	
	$q_{z,\ perm}$	F_z ($q_{z,\ perm}$ x L)
[mm]	[kN/m]	[kN]
500	**46,81**	**23,41**
750	**27,65**	**20,74**
1000	**18,60**	**18,60**
1250	**13,48**	**16,85**

q_z [kN/m] as permanent load over L.

Point Load - centrical

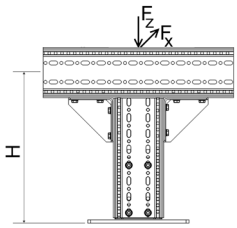

H_{max}	L_{max} = 1 m $F_{z,\ perm}$ for	
	$F_x = 0$	$F_x = \mu_0 * F_z$
[mm]	[kN]	[kN]
500	**26,92**	**14,07**
1000	**26,92**	**6,57**
1500	**26,92**	**4,11**
2000	**26,92**	**2,90**

F_z [kN] as a permanent load. F_x [kN] as a variable load;
Central load introduction for planned eccentricity ± 30 mm.

2 Point Loads

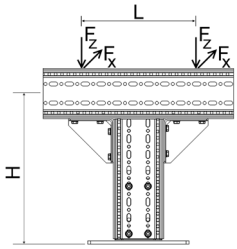

H_{max} \ L_{max}	500 $F_{z,\ perm}$ for		750 $F_{z,\ perm}$ for		1000 $F_{z,\ perm}$ for	
	$F_x = 0$	$F_x = \mu_0 * F_z$	$F_x = 0$	$F_x = \mu_0 * F_z$	$F_x = 0$	$F_x = \mu_0 * F_z$
[mm]	[kN]	[kN]	[kN]	[kN]	[kN]	[kN]
500	**9,34**	**7,03**	**7,76**	**6,03**	**6,63**	**5,27**
1000	**9,34**	**3,29**	**7,76**	**3,29**	**6,63**	**3,29**
1500	**9,34**	**2,05**	**7,76**	**2,05**	**6,63**	**2,05**
2000	**9,34**	**1,45**	**7,76**	**1,45**	**6,63**	**1,45**

F_z [kN] as permanent loads at distance L. F_x [kN] as variable loads at distance L.

3 Point Loads

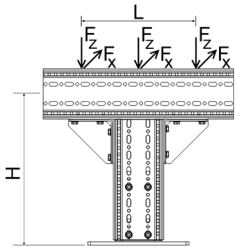

H_{max} \ L_{max}	500 $F_{z,\ perm}$ for		750 $F_{z,\ perm}$ for		1000 $F_{z,\ perm}$ for	
	$F_x = 0$	$F_x = \mu_0 * F_z$	$F_x = 0$	$F_x = \mu_0 * F_z$	$F_x = 0$	$F_x = \mu_0 * F_z$
[mm]	[kN]	[kN]	[kN]	[kN]	[kN]	[kN]
500	**7,19**	**4,69**	**6,21**	**4,68**	**5,46**	**4,11**
1000	**7,19**	**2,19**	**6,21**	**2,19**	**5,46**	**2,19**
1500	**7,19**	**1,37**	**6,21**	**1,37**	**5,46**	**1,37**
2000	**7,19**	**0,97**	**6,21**	**0,97**	**5,46**	**0,97**

F_z [kN] as permanent loads at distance L and L/2. F_x [kN] as variable loads at distance L and L/2.

All illustrated structures are able to be installed standing as well.
Friction coefficient μ_0 = 0,2 for friction in longitudinal direction. Max. Deviation H/150.

Working loads in accordance with Eurocode 3

Frame F 100/160 / STA

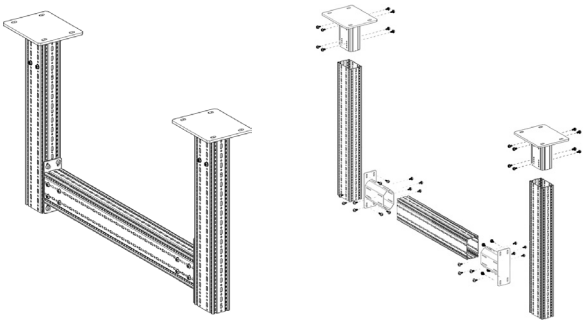

Part List
2 x End Support WBD-4KT 121/160-F100/160
3 x Beam Section TP F 100/160
2 x End Support STA F 100 - 100/160
40 x Self-Forming-Screw FLS F

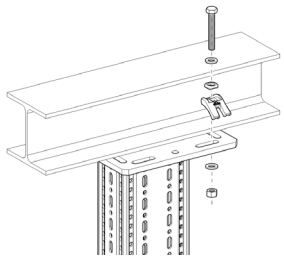

Note:
Unless otherwise stated, the information is based on installation using the Assembly Set MS 5P M12 S. If fixings are done using anchors, these must be verified separately.

Distributed Load

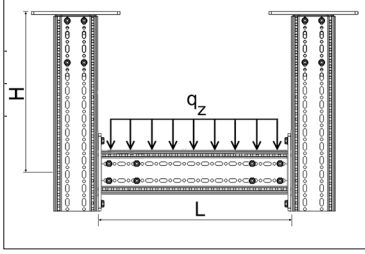

H_{max} \ L_{max}	1500		2000		2500		3000		3500		4000	
	$q_{z.\,perm}$	F_z (q_z * L)	$q_{z.\,perm}$	F_z (q_z * L)	$q_{z.\,perm}$	F_z (q_z * L)	$q_{z.\,perm}$	F_z (q_z * L)	$q_{z.\,perm}$	F_z (q_z * L)	$q_{z.\,perm}$	F_z (q_z * L)
[mm]	[kN/m]	[kN]	[kN/m]	[kN]	[kN/m]	[kN]	[kN/m]	[kN]	[kN/m]	[kN]	[kN/m]	[kN]
2000	**20,37**	**30,56**	**15,00**	**30,00**	**12,31**	**30,78**	**10,27**	**30,81**	**6,73**	**23,56**	**7,53**	**30,12**
2500	**20,36**	**30,54**	**14,80**	**29,60**	**12,30**	**30,75**	**10,26**	**30,79**	**6,73**	**23,55**	**7,47**	**29,87**
3000	**20,35**	**30,53**	**14,75**	**29,50**	**12,29**	**30,73**	**9,30**	**27,90**	**6,73**	**23,55**	**7,41**	**29,63**
3500	**20,31**	**30,47**	**14,70**	**29,40**	**12,28**	**30,70**	**9,23**	**27,70**	**6,73**	**23,55**	**7,35**	**29,39**
4000	**20,30**	**30,45**	**14,65**	**29,30**	**12,28**	**30,69**	**9,23**	**27,69**	**6,72**	**23,54**	**7,29**	**29,16**

q_z [kN/m] as permanent load over L.

Point Load

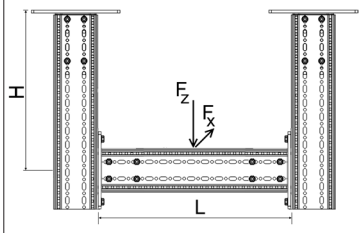

H_{max} \ L_{max}	1500		2000		2500		3000		3500		4000	
	$F_{z.\,perm}$ for		$F_{z.\,perm}$ for		$F_{z.\,perm}$ for		$F_{z.\,perm}$ for		$F_{z.\,perm}$ for		$F_{z.\,perm}$ for	
	$F_x = 0$	$F_x = \mu_0 * F_z$	$F_x = 0$	$F_x = \mu_0 * F_z$	$F_x = 0$	$F_x = \mu_0 * F_z$	$F_x = 0$	$F_x = \mu_0 * F_z$	$F_x = 0$	$F_x = \mu_0 * F_z$	$F_x = 0$	$F_x = \mu_0 * F_z$
[mm]	[kN]	[kN]	[kN]	[kN]	[kN]	[kN]	[kN]	[kN]	[kN]	[kN]	[kN]	[kN]
2000	**28,92**	**7,80**	**26,40**	**7,77**	**21,46**	**7,74**	**16,93**	**7,70**	**14,00**	**7,66**	**11,77**	**7,43**
2500	**28,87**	**6,29**	**26,34**	**6,26**	**21,41**	**6,24**	**16,85**	**6,21**	**13,95**	**6,17**	**11,73**	**6,09**
3000	**28,75**	**5,27**	**26,25**	**5,25**	**21,37**	**5,23**	**16,76**	**5,20**	**13,88**	**5,17**	**11,66**	**5,03**
3500	**28,59**	**4,48**	**26,15**	**4,45**	**21,28**	**4,42**	**16,74**	**4,37**	**13,86**	**4,30**	**11,64**	**4,21**
4000	**28,41**	**3,74**	**26,03**	**3,73**	**21,19**	**3,71**	**16,69**	**3,67**	**13,83**	**3,63**	**11,61**	**3,58**

F_z [kN] as a permanent load at distance L/2. F_x [kN] as a variable load at distance L/2.

2 Point Loads

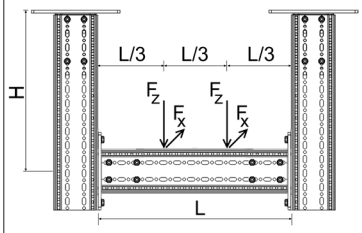

H_{max} \ L_{max}	1500		2000		2500		3000		3500		4000	
	$F_{z.\,perm}$ for		$F_{z.\,perm}$ for		$F_{z.\,perm}$ for		$F_{z.\,perm}$ for		$F_{z.\,perm}$ for		$F_{z.\,perm}$ for	
	$F_x = 0$	$F_x = \mu_0 * F_z$	$F_x = 0$	$F_x = \mu_0 * F_z$	$F_x = 0$	$F_x = \mu_0 * F_z$	$F_x = 0$	$F_x = \mu_0 * F_z$	$F_x = 0$	$F_x = \mu_0 * F_z$	$F_x = 0$	$F_x = \mu_0 * F_z$
[mm]	[kN]	[kN]	[kN]	[kN]	[kN]	[kN]	[kN]	[kN]	[kN]	[kN]	[kN]	[kN]
2000	**15,49**	**3,02**	**14,00**	**2,97**	**11,50**	**2,97**	**9,20**	**2,96**	**8,00**	**2,95**	**7,50**	**2,91**
2500	**15,49**	**2,76**	**13,95**	**2,74**	**11,49**	**2,70**	**9,20**	**2,64**	**8,00**	**2,64**	**7,45**	**2,64**
3000	**15,49**	**2,19**	**13,94**	**2,18**	**11,48**	**2,16**	**9,19**	**2,13**	**7,99**	**2,13**	**7,44**	**2,13**
3500	**15,49**	**1,34**	**13,93**	**1,34**	**11,47**	**1,33**	**9,19**	**1,32**	**7,99**	**1,31**	**7,42**	**1,31**
4000	**15,48**	**1,34**	**13,92**	**1,34**	**11,34**	**1,33**	**9,19**	**1,32**	**7,99**	**1,31**	**7,41**	**1,30**

F_z [kN] as permanent loads at distance 2*L/3 and L/3. F_x [kN] as variable loads at distance 2*L/3 and L/3.

3 Point Loads

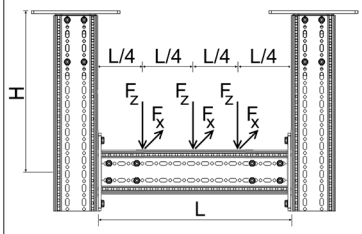

H_{max} \ L_{max}	1500		2000		2500		3000		3500		4000	
	$F_{z.\,perm}$ for		$F_{z.\,perm}$ for		$F_{z.\,perm}$ for		$F_{z.\,perm}$ for		$F_{z.\,perm}$ for		$F_{z.\,perm}$ for	
	$F_x = 0$	$F_x = \mu_0 * F_z$	$F_x = 0$	$F_x = \mu_0 * F_z$	$F_x = 0$	$F_x = \mu_0 * F_z$	$F_x = 0$	$F_x = \mu_0 * F_z$	$F_x = 0$	$F_x = \mu_0 * F_z$	$F_x = 0$	$F_x = \mu_0 * F_z$
[mm]	[kN]	[kN]	[kN]	[kN]	[kN]	[kN]	[kN]	[kN]	[kN]	[kN]	[kN]	[kN]
2000	**10,41**	**2,60**	**10,30**	**2,59**	**8,60**	**2,58**	**7,40**	**2,57**	**6,30**	**2,56**	**5,20**	**2,55**
2500	**10,41**	**2,10**	**10,28**	**2,09**	**7,39**	**2,08**	**7,39**	**2,08**	**6,26**	**2,07**	**5,20**	**2,06**
3000	**10,41**	**1,76**	**10,27**	**1,75**	**7,38**	**1,75**	**7,38**	**1,74**	**6,26**	**1,73**	**5,19**	**1,71**
3500	**10,40**	**1,49**	**10,27**	**1,49**	**7,37**	**1,48**	**7,37**	**1,46**	**6,25**	**1,45**	**5,19**	**1,42**
4000	**10,34**	**1,25**	**10,27**	**1,24**	**7,35**	**1,24**	**7,35**	**1,23**	**6,25**	**1,22**	**5,19**	**1,20**

F_z [kN] as permanent loads at distance 3*L/4. L/2 and L/4. F_x [kN] as variable loads at distance 3*L/4. L/2 and L/4.

All illustrated structures are able to be installed standing as well.
Friction coefficient μ_0 = 0,2 for friction in longitudinal direction. Max. deviation H/100; L/200.

Working loads in accordance with Eurocode 3

Frame F 100/160 / WD

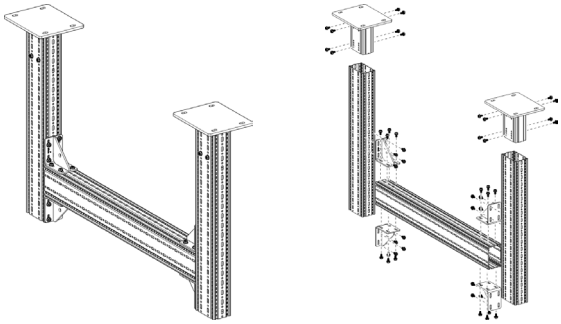

Part List
2 x End Support WBD-4KT 121/160-F100/160
3 x Beam Section TP F 100/160
4 x Corner Bracket WD F 100 140/140
48 x Self-Forming-Screw FLS F

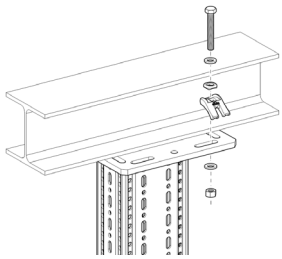

Note:
Unless otherwise stated, the information is based on installation using the Assembly Set MS 5P M12 S. If fixings are done using anchors, these must be verified separately.

Distributed Load

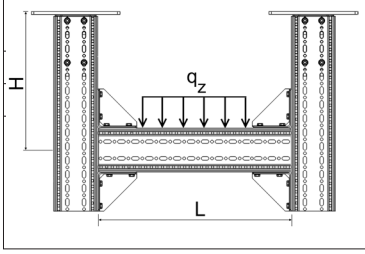

H_{max} \ L_{max}	1500		2000		2500		3000		3500		4000	
	$q_{z.\,perm}$	F_z (q_z * L)	$q_{z.\,perm}$	F_z (q_z * L)	$q_{z.\,perm}$	F_z (q_z * L)	$q_{z.\,perm}$	F_z (q_z * L)	$q_{z.\,perm}$	F_z (q_z * L)	$q_{z.\,perm}$	F_z (q_z * L)
[mm]	[kN/m]	[kN]	[kN/m]	[kN]	[kN/m]	[kN]	[kN/m]	[kN]	[kN/m]	[kN]	[kN/m]	[kN]
2000	**53,21**	**64,92**	**37,71**	**64,87**	**23,77**	**52,77**	**16,00**	**43,52**	**11,15**	**35,91**	**8,25**	**30,68**
2500	**53,21**	**64,92**	**36,21**	**62,29**	**23,40**	**51,95**	**15,87**	**43,17**	**10,95**	**35,25**	**8,12**	**30,20**
3000	**53,21**	**64,92**	**35,97**	**61,86**	**23,25**	**51,62**	**15,64**	**42,54**	**11,11**	**35,78**	**8,00**	**29,76**
3500	**53,21**	**64,92**	**35,68**	**61,36**	**23,18**	**51,46**	**15,62**	**42,49**	**10,79**	**34,76**	**7,89**	**29,34**
4000	**53,21**	**64,92**	**35,51**	**61,07**	**22,42**	**49,78**	**15,22**	**41,39**	**10,60**	**34,14**	**7,78**	**28,95**

q_z [kN/m] as permanent load over L.

Point Load

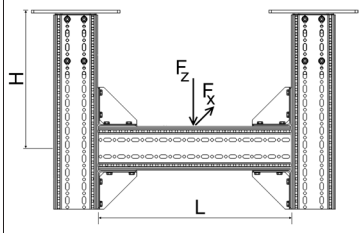

H_{max} \ L_{max}	1500		2000		2500		3000		3500		4000	
	$F_{z.\,perm}$ for		$F_{z.\,perm}$ for		$F_{z.\,perm}$ for		$F_{z.\,perm}$ for		$F_{z.\,perm}$ for		$F_{z.\,perm}$ for	
	$F_x = 0$	$F_x = \mu_0 * F_z$	$F_x = 0$	$F_x = \mu_0 * F_z$	$F_x = 0$	$F_x = \mu_0 * F_z$	$F_x = 0$	$F_x = \mu_0 * F_z$	$F_x = 0$	$F_x = \mu_0 * F_z$	$F_x = 0$	$F_x = \mu_0 * F_z$
[mm]	[kN]	[kN]	[kN]	[kN]	[kN]	[kN]	[kN]	[kN]	[kN]	[kN]	[kN]	[kN]
2000	**46,22**	**7,79**	**35,54**	**7,76**	**29,16**	**7,72**	**24,34**	**7,68**	**21,21**	**7,64**	**18,83**	**7,43**
2500	**45,95**	**6,28**	**35,34**	**6,26**	**28,99**	**6,23**	**24,21**	**6,19**	**21,08**	**6,15**	**18,71**	**6,09**
3000	**45,69**	**5,26**	**35,14**	**5,24**	**28,82**	**5,22**	**24,06**	**5,19**	**20,96**	**5,16**	**18,52**	**5,03**
3500	**45,44**	**4,48**	**34,95**	**4,45**	**28,66**	**4,42**	**23,92**	**4,37**	**20,83**	**4,30**	**18,27**	**4,21**
4000	**44,96**	**3,74**	**34,76**	**3,73**	**28,51**	**3,71**	**23,79**	**3,67**	**20,71**	**3,63**	**18,05**	**3,58**

F_z [kN] as a permanent load at distance L/2. F_x [kN] as a variable load at distance L/2.

2 Point Loads

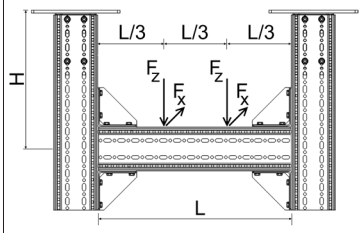

H_{max} \ L_{max}	1500		2000		2500		3000		3500		4000	
	$F_{z.\,perm}$ for		$F_{z.\,perm}$ for		$F_{z.\,perm}$ for		$F_{z.\,perm}$ for		$F_{z.\,perm}$ for		$F_{z.\,perm}$ for	
	$F_x = 0$	$F_x = \mu_0 * F_z$	$F_x = 0$	$F_x = \mu_0 * F_z$	$F_x = 0$	$F_x = \mu_0 * F_z$	$F_x = 0$	$F_x = \mu_0 * F_z$	$F_x = 0$	$F_x = \mu_0 * F_z$	$F_x = 0$	$F_x = \mu_0 * F_z$
[mm]	[kN]	[kN]	[kN]	[kN]	[kN]	[kN]	[kN]	[kN]	[kN]	[kN]	[kN]	[kN]
2000	**32,43**	**3,90**	**27,62**	**3,88**	**22,07**	**3,87**	**17,84**	**3,85**	**14,57**	**3,83**	**11,82**	**3,81**
2500	**31,81**	**3,14**	**26,80**	**3,13**	**21,64**	**3,12**	**17,49**	**3,10**	**14,29**	**3,09**	**11,65**	**3,07**
3000	**31,69**	**2,63**	**26,75**	**2,62**	**21,50**	**2,61**	**17,24**	**2,60**	**14,09**	**2,59**	**11,48**	**2,55**
3500	**30,56**	**2,24**	**25,99**	**2,23**	**21,38**	**2,22**	**17,21**	**2,19**	**13,90**	**2,16**	**11,32**	**2,13**
4000	**29,87**	**1,87**	**25,80**	**1,87**	**20,56**	**1,86**	**16,65**	**1,84**	**13,77**	**1,83**	**11,17**	**1,80**

F_z [kN] as permanent loads at distance 2*L/3 and L/3. F_x [kN] as variable loads at distance 2*L/3 and L/3.

3 Point Loads

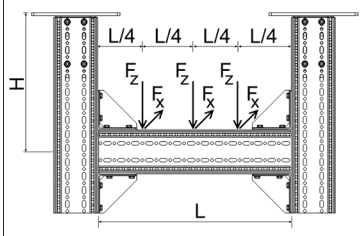

H_{max} \ L_{max}	1500		2000		2500		3000		3500		4000	
	$F_{z.\,perm}$ for		$F_{z.\,perm}$ for		$F_{z.\,perm}$ for		$F_{z.\,perm}$ for		$F_{z.\,perm}$ for		$F_{z.\,perm}$ for	
	$F_x = 0$	$F_x = \mu_0 * F_z$	$F_x = 0$	$F_x = \mu_0 * F_z$	$F_x = 0$	$F_x = \mu_0 * F_z$	$F_x = 0$	$F_x = \mu_0 * F_z$	$F_x = 0$	$F_x = \mu_0 * F_z$	$F_x = 0$	$F_x = \mu_0 * F_z$
[mm]	[kN]	[kN]	[kN]	[kN]	[kN]	[kN]	[kN]	[kN]	[kN]	[kN]	[kN]	[kN]
2000	**21,64**	**2,60**	**18,34**	**2,59**	**15,18**	**2,58**	**12,62**	**2,57**	**10,25**	**2,56**	**8,52**	**2,55**
2500	**21,64**	**2,10**	**18,17**	**2,09**	**15,06**	**2,08**	**12,44**	**2,07**	**10,10**	**2,06**	**8,39**	**2,05**
3000	**21,40**	**1,76**	**18,03**	**1,75**	**14,94**	**1,74**	**12,26**	**1,74**	**9,95**	**1,73**	**8,27**	**1,71**
3500	**20,89**	**1,49**	**17,84**	**1,49**	**14,76**	**1,48**	**12,02**	**1,46**	**9,82**	**1,45**	**8,16**	**1,42**
4000	**20,55**	**1,25**	**17,72**	**1,24**	**14,57**	**1,24**	**11,87**	**1,23**	**9,69**	**1,22**	**8,05**	**1,20**

F_z [kN] as permanent loads at distance 3*L/4. L/2 and L/4. F_x [kN] as variable loads at distance 3*L/4. L/2 and L/4.

All illustrated structures are able to be installed standing as well.
Friction coefficient $\mu_0 = 0{,}2$ for friction in longitudinal direction. Max. deviation H/100; L/200.

Working loads in accordance with Eurocode 3

Joining Beam Bracket F 100/160 horizontal

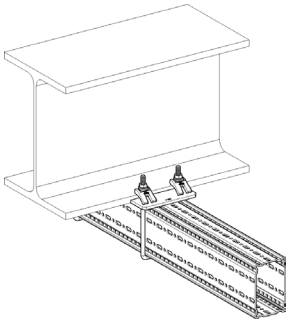

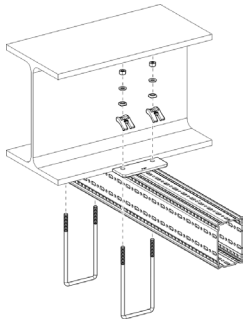

Part List
1 x Beam Section TP F 100/160
2 x U-Holder SB F 100/160-40

Distributed Load

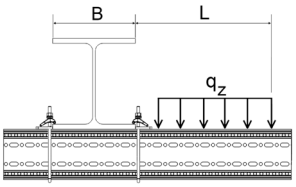

B_{max} \ L_{max}	300		500		700		900		1100	
	$q_{z.\,perm}$	F_z (q_z * L)	$q_{z.\,perm}$	F_z (q_z * L)	$q_{z.\,perm}$	F_z (q_z * L)	$q_{z.\,perm}$	F_z (q_z * L)	$q_{z.\,perm}$	F_z (q_z * L)
[mm]	[kN/m]	[kN]	[kN/m]	[kN]	[kN/m]	[kN]	[kN/m]	[kN]	[kN/m]	[kN]
100	**16,14**	**4,84**	**6,31**	**3,15**	**3,36**	**2,35**	**2,07**	**1,86**	**1,39**	**1,53**
150	**22,94**	**6,88**	**9,38**	**4,69**	**5,15**	**3,61**	**3,25**	**2,93**	**2,23**	**2,46**
200	**27,89**	**8,37**	**11,81**	**5,90**	**6,63**	**4,64**	**4,26**	**3,83**	**2,96**	**3,26**
250	**31,66**	**9,50**	**13,76**	**6,88**	**7,87**	**5,51**	**5,12**	**4,61**	**3,60**	**3,96**
300	**34,63**	**10,39**	**15,37**	**7,69**	**8,92**	**6,25**	**5,87**	**5,29**	**4,17**	**4,59**

q_z [kN/m] as permanent load over L.

Point Load

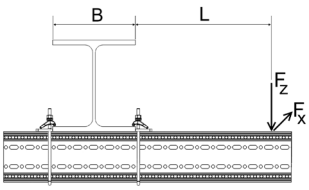

B_{max} \ L_{max}	300		500		700		900		1100	
	$F_{z.\,perm}$ for		$F_{z.\,perm}$ for		$F_{z.\,perm}$ for		$F_{z.\,perm}$ for		$F_{z.\,perm}$ for	
	$F_x = 0$	$F_x = \mu_0 * F_z$	$F_x = 0$	$F_x = \mu_0 * F_z$	$F_x = 0$	$F_x = \mu_0 * F_z$	$F_x = 0$	$F_x = \mu_0 * F_z$	$F_x = 0$	$F_x = \mu_0 * F_z$
[mm]	[kN]	[kN]	[kN]	[kN]	[kN]	[kN]	[kN]	[kN]	[kN]	[kN]
100	**2,53**	**1,25**	**1,66**	**0,82**	**1,23**	**0,61**	**0,97**	**0,48**	**0,80**	**0,40**
150	**3,77**	**1,87**	**2,58**	**1,28**	**1,95**	**0,97**	**1,57**	**0,78**	**1,31**	**0,65**
200	**4,75**	**2,36**	**3,36**	**1,67**	**2,60**	**1,29**	**2,11**	**1,05**	**1,77**	**0,88**
250	**5,56**	**2,76**	**4,04**	**2,01**	**3,17**	**1,57**	**2,60**	**1,29**	**2,21**	**1,10**
300	**6,22**	**3,09**	**4,63**	**2,30**	**3,69**	**1,83**	**3,06**	**1,52**	**2,61**	**1,30**

F_z [kN] as a permanent load at distance L. F_x [kN] as a variable load at distance L.

2 Point Loads

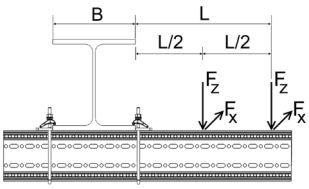

B_{max} \ L_{max}	300		500		700		900		1100	
	$F_{z.\,perm}$ for		$F_{z.\,perm}$ for		$F_{z.\,perm}$ for		$F_{z.\,perm}$ for		$F_{z.\,perm}$ for	
	$F_x = 0$	$F_x = \mu_0 * F_z$	$F_x = 0$	$F_x = \mu_0 * F_z$	$F_x = 0$	$F_x = \mu_0 * F_z$	$F_x = 0$	$F_x = \mu_0 * F_z$	$F_x = 0$	$F_x = \mu_0 * F_z$
[mm]	[kN]	[kN]	[kN]	[kN]	[kN]	[kN]	[kN]	[kN]	[kN]	[kN]
100	**1,64**	**0,78**	**1,10**	**0,52**	**0,82**	**0,39**	**0,66**	**0,31**	**0,54**	**0,26**
150	**2,38**	**1,13**	**1,68**	**0,80**	**1,29**	**0,61**	**1,05**	**0,50**	**0,88**	**0,42**
200	**2,94**	**1,39**	**2,15**	**1,02**	**1,69**	**0,80**	**1,39**	**0,66**	**1,18**	**0,56**
250	**3,38**	**1,60**	**2,54**	**1,21**	**2,04**	**0,97**	**1,70**	**0,81**	**1,45**	**0,69**
300	**3,73**	**1,77**	**2,88**	**1,37**	**2,34**	**1,11**	**1,97**	**0,94**	**1,70**	**0,81**

F_z [kN] as permanent loads at distance L and L/2. F_x [kN] as variable loads at distance L and L/2.

3 Point Loads

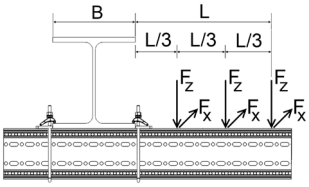

B_{max} \ L_{max}	300		500		700		900		1100	
	$F_{z.\,perm}$ for		$F_{z.\,perm}$ for		$F_{z.\,perm}$ for		$F_{z.\,perm}$ for		$F_{z.\,perm}$ for	
	$F_x = 0$	$F_x = \mu_0 * F_z$	$F_x = 0$	$F_x = \mu_0 * F_z$	$F_x = 0$	$F_x = \mu_0 * F_z$	$F_x = 0$	$F_x = \mu_0 * F_z$	$F_x = 0$	$F_x = \mu_0 * F_z$
[mm]	[kN]	[kN]	[kN]	[kN]	[kN]	[kN]	[kN]	[kN]	[kN]	[kN]
100	**1,19**	**0,57**	**0,80**	**0,39**	**0,61**	**0,29**	**0,48**	**0,24**	**0,40**	**0,20**
150	**1,70**	**0,81**	**1,21**	**0,58**	**0,94**	**0,45**	**0,77**	**0,37**	**0,65**	**0,31**
200	**2,08**	**0,99**	**1,55**	**0,74**	**1,23**	**0,59**	**1,01**	**0,49**	**0,86**	**0,42**
250	**2,38**	**1,13**	**1,82**	**0,87**	**1,47**	**0,70**	**1,23**	**0,59**	**1,06**	**0,51**
300	**2,61**	**1,24**	**2,05**	**0,97**	**1,68**	**0,80**	**1,42**	**0,68**	**1,23**	**0,59**

F_z [kN] as permanent loads at distance L. 2*L/3 and L/3. F_x [kN] as variable loads at distance L. 2*L/3 and L/3.

Friction coefficient μ_0 = 0,2 for friction in longitudinal direction. Max. deviation L/100.

03/2026

Working loads in accordance with Eurocode 3

Joining Beam Bracket F 100/160 vertical

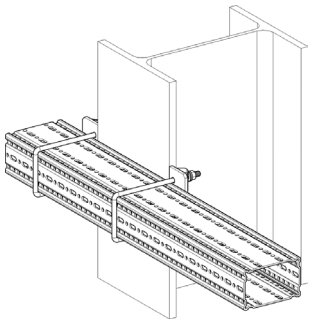

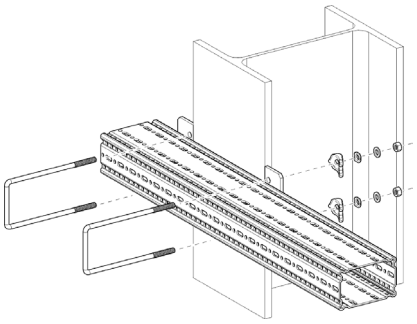

Part List
1 x Beam Section TP F 100/160
2 x U-Holder SB F 100/160-40

Distributed Load

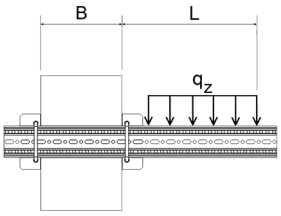

B_{max} \ L_{max}	300		500		700		900		1100	
	$q_{z.\,perm}$	F_z (q_z * L)	$q_{z.\,perm}$	F_z (q_z * L)	$q_{z.\,perm}$	F_z (q_z * L)	$q_{z.\,perm}$	F_z (q_z * L)	$q_{z.\,perm}$	F_z (q_z * L)
[mm]	[kN/m]	[kN]	[kN/m]	[kN]	[kN/m]	[kN]	[kN/m]	[kN]	[kN/m]	[kN]
100	**3,81**	**1,14**	**1,57**	**0,79**	**0,84**	**0,59**	**0,51**	**0,46**	**0,33**	**0,37**
150	**5,31**	**1,59**	**2,33**	**1,17**	**1,30**	**0,91**	**0,82**	**0,74**	**0,55**	**0,61**
200	**6,36**	**1,91**	**2,92**	**1,46**	**1,67**	**1,17**	**1,08**	**0,97**	**0,74**	**0,82**
250	**7,15**	**2,14**	**3,38**	**1,69**	**1,98**	**1,39**	**1,30**	**1,17**	**0,91**	**1,00**
300	**7,75**	**2,32**	**3,76**	**1,88**	**2,24**	**1,57**	**1,49**	**1,34**	**1,06**	**1,16**

q_z [kN/m] as permanent load over L.

Point Load

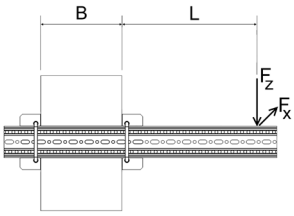

B_{max} \ L_{max}	300		500		700		900		1100	
	$F_{z.\,perm}$ for		$F_{z.\,perm}$ for		$F_{z.\,perm}$ for		$F_{z.\,perm}$ for		$F_{z.\,perm}$ for	
	$F_x = 0$	$F_x = \mu_0 * F_z$	$F_x = 0$	$F_x = \mu_0 * F_z$	$F_x = 0$	$F_x = \mu_0 * F_z$	$F_x = 0$	$F_x = \mu_0 * F_z$	$F_x = 0$	$F_x = \mu_0 * F_z$
[mm]	[kN]	[kN]	[kN]	[kN]	[kN]	[kN]	[kN]	[kN]	[kN]	[kN]
100	**0,70**	**0,67**	**0,45**	**0,43**	**0,33**	**0,31**	**0,25**	**0,24**	**0,20**	**0,19**
150	**1,05**	**1,00**	**0,71**	**0,68**	**0,53**	**0,51**	**0,42**	**0,40**	**0,34**	**0,32**
200	**1,32**	**1,26**	**0,93**	**0,89**	**0,71**	**0,68**	**0,57**	**0,54**	**0,47**	**0,45**
250	**1,54**	**1,48**	**1,12**	**1,07**	**0,87**	**0,83**	**0,71**	**0,68**	**0,59**	**0,56**
300	**1,73**	**1,66**	**1,28**	**1,23**	**1,01**	**0,97**	**0,83**	**0,80**	**0,70**	**0,67**

F_z [kN] as a permanent load at distance L. F_x [kN] as a variable load at distance L.

2 Point Loads

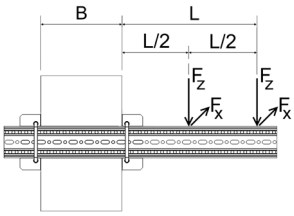

B_{max} \ L_{max}	300		500		700		900		1100	
	$F_{z.\,perm}$ for		$F_{z.\,perm}$ for		$F_{z.\,perm}$ for		$F_{z.\,perm}$ for		$F_{z.\,perm}$ for	
	$F_x = 0$	$F_x = \mu_0 * F_z$	$F_x = 0$	$F_x = \mu_0 * F_z$	$F_x = 0$	$F_x = \mu_0 * F_z$	$F_x = 0$	$F_x = \mu_0 * F_z$	$F_x = 0$	$F_x = \mu_0 * F_z$
[mm]	[kN]	[kN]	[kN]	[kN]	[kN]	[kN]	[kN]	[kN]	[kN]	[kN]
100	**0,43**	**0,42**	**0,29**	**0,27**	**0,21**	**0,20**	**0,16**	**0,15**	**0,13**	**0,12**
150	**0,63**	**0,60**	**0,44**	**0,42**	**0,33**	**0,32**	**0,27**	**0,25**	**0,22**	**0,21**
200	**0,78**	**0,75**	**0,57**	**0,54**	**0,44**	**0,42**	**0,36**	**0,34**	**0,30**	**0,29**
250	**0,90**	**0,86**	**0,67**	**0,64**	**0,53**	**0,51**	**0,44**	**0,42**	**0,37**	**0,36**
300	**0,99**	**0,95**	**0,76**	**0,73**	**0,62**	**0,59**	**0,51**	**0,49**	**0,44**	**0,42**

F_z [kN] as permanent loads at distance L and L/2. F_x [kN] as variable loads at distance L and L/2.

3 Point Loads

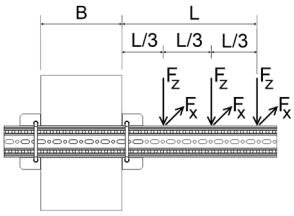

B_{max} \ L_{max}	300		500		700		900		1100	
	$F_{z.\,perm}$ for		$F_{z.\,perm}$ for		$F_{z.\,perm}$ for		$F_{z.\,perm}$ for		$F_{z.\,perm}$ for	
	$F_x = 0$	$F_x = \mu_0 * F_z$	$F_x = 0$	$F_x = \mu_0 * F_z$	$F_x = 0$	$F_x = \mu_0 * F_z$	$F_x = 0$	$F_x = \mu_0 * F_z$	$F_x = 0$	$F_x = \mu_0 * F_z$
[mm]	[kN]	[kN]	[kN]	[kN]	[kN]	[kN]	[kN]	[kN]	[kN]	[kN]
100	**0,31**	**0,30**	**0,21**	**0,20**	**0,15**	**0,15**	**0,12**	**0,11**	**0,09**	**0,09**
150	**0,45**	**0,43**	**0,32**	**0,31**	**0,24**	**0,23**	**0,20**	**0,19**	**0,16**	**0,15**
200	**0,55**	**0,53**	**0,41**	**0,39**	**0,32**	**0,31**	**0,26**	**0,25**	**0,22**	**0,21**
250	**0,63**	**0,61**	**0,48**	**0,46**	**0,39**	**0,37**	**0,32**	**0,31**	**0,27**	**0,26**
300	**0,70**	**0,67**	**0,54**	**0,52**	**0,44**	**0,42**	**0,37**	**0,36**	**0,32**	**0,30**

F_z [kN] as permanent loads at distance L. 2*L/3 and L/3. F_x [kN] as variable loads at distance L. 2*L/3 and L/3.

Friction coefficient $\mu_0 = 0{,}2$ for friction in longitudinal direction. Max. deviation L/100.

Working loads in accordance with Eurocode 3

Beam Bracket F 100/160 - Variant a) clamped

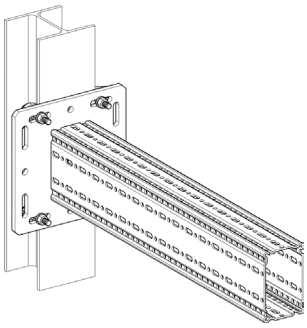

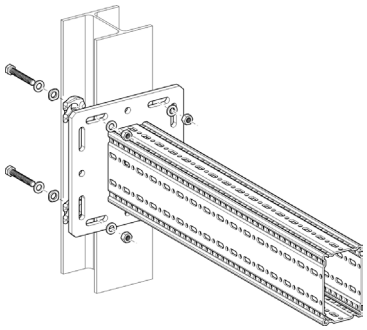

Part List
1 x Beam Bracket TKO F 100/160
1 x Assembly Set MS 5P M12 S

Distributed Load

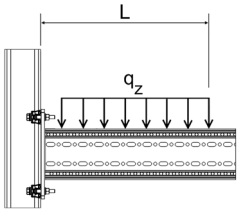

L_{max}	$q_{z.\ perm}$	F_z ($q_{z.\ perm}$ * L)
[mm]	[kN/m]	[kN]
300	**47,89**	**14,37**
500	**36,39**	**18,20**
700	**18,57**	**13,00**
900	**11,23**	**10,11**
1100	**7,52**	**8,27**

q_z [kN/m] as permanent load over L.

Point Load

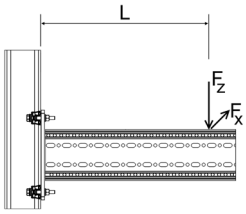

L_{max}	$F_{z.\ perm}$ for $F_x = 0$	$F_{z.\ perm}$ for $F_x = \mu_0 * F_z$
[mm]	[kN]	[kN]
300	**15,16**	**9,35**
500	**9,10**	**5,61**
700	**6,50**	**4,01**
900	**5,05**	**3,12**
1100	**4,14**	**2,55**

F_z [kN] as a permanent load at distance L. F_x [kN] as a variable load at distance L.

2 Point Loads

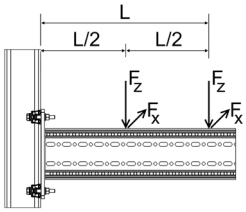

L_{max}	$F_{z.\ perm}$ for $F_x = 0$	$F_{z.\ perm}$ for $F_x = \mu_0 * F_z$
[mm]	[kN]	[kN]
300	**9,41**	**6,23**
500	**6,07**	**3,74**
700	**4,33**	**2,67**
900	**3,37**	**2,08**
1100	**2,76**	**1,70**

F_z [kN] as permanent loads at distance L and L/2. F_x [kN] as variable loads at distance L and L/2.

3 Point Loads

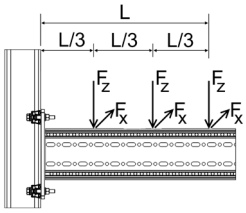

L_{max}	$F_{z.\ perm}$ for $F_x = 0$	$F_{z.\ perm}$ for $F_x = \mu_0 * F_z$
[mm]	[kN]	[kN]
300	**5,69**	**4,67**
500	**4,55**	**2,80**
700	**3,25**	**2,00**
900	**2,53**	**1,56**
1100	**2,07**	**1,27**

F_z [kN] as permanent loads at distance L. 2*L/3 and L/3. F_x [kN] as variable loads at distance L. 2*L/3 and L/3.

Friction coefficient $\mu_0 = 0{,}2$ for friction in longitudinal direction. Max. deviation L/100.

Working loads in accordance with Eurocode 3

Beam Bracket F 100/160 - Variant b) anchored

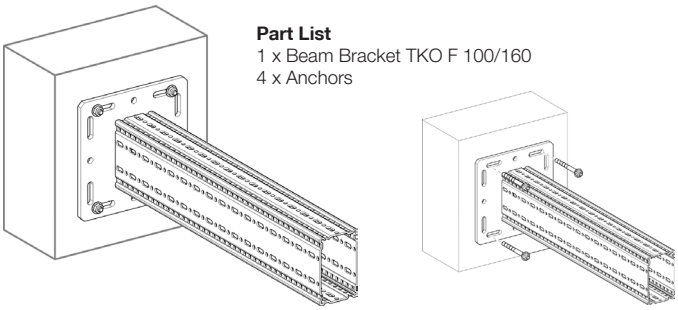

Part List
1 x Beam Bracket TKO F 100/160
4 x Anchors

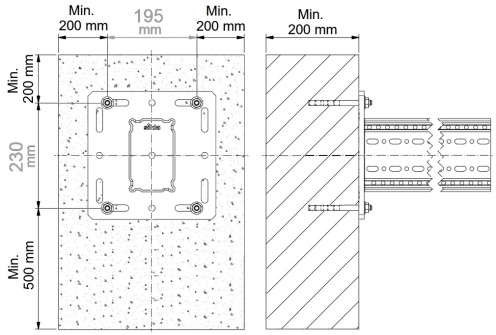

Distributed Load

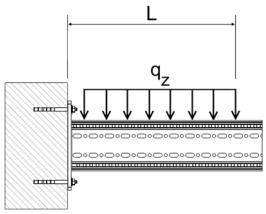

Anchor / L_{max}	Bolt Anchor AN BZ plus M12 hef. 70		Bolt Anchor AN BZ3 M12 hef. 125		Injection system VMZ-A M12x125	
	$q_{z,\,perm}$	F_z ($q_{z,\,perm}$ * L)	$q_{z,\,perm}$	F_z ($q_{z,\,perm}$ * L)	$q_{z,\,perm}$	F_z ($q_{z,\,perm}$ * L)
[mm]	[kN/m]	[kN]	[kN/m]	[kN]	[kN/m]	[kN]
300	**35,12**	**10,54**	**40,85**	**12,26**	**45,07**	**13,52**
500	**17,14**	**8,57**	**20,57**	**10,29**	**24,17**	**12,09**
700	**10,32**	**7,22**	**12,66**	**8,86**	**15,61**	**10,93**
900	**6,93**	**6,24**	**8,65**	**7,79**	**11,08**	**9,97**
1100	**5,00**	**5,49**	**6,31**	**6,94**	**8,33**	**9,17**

q_z [kN/m] as permanent load over L.

Point Load

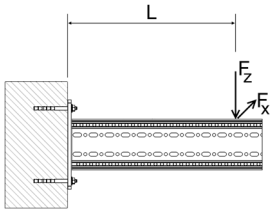

Anchor / L_{max}	Bolt Anchor AN BZ plus M12 hef. 70		Bolt Anchor AN BZ3 M12 hef. 125		Injection system VMZ-A M12x125	
	$F_{z,\,perm}$ for		$F_{z,\,perm}$ for		$F_{z,\,perm}$ for	
	$F_x = 0$	$F_x = \mu_0 * F_z$	$F_x = 0$	$F_x = \mu_0 * F_z$	$F_x = 0$	$F_x = \mu_0 * F_z$
[mm]	[kN]	[kN]	[kN]	[kN]	[kN]	[kN]
300	**7,84**	**7,84**	**9,52**	**9,52**	**11,48**	**11,48**
500	**5,84**	**5,84**	**7,34**	**7,34**	**9,55**	**9,55**
700	**4,66**	**4,66**	**5,97**	**5,97**	**8,18**	**8,18**
900	**3,71**	**3,71**	**4,78**	**4,78**	**6,63**	**6,63**
1100	**3,04**	**3,04**	**3,91**	**3,91**	**5,43**	**5,43**

F_z [kN] as a permanent load at distance L. F_x [kN] as a variable load at distance L.

2 Point Loads

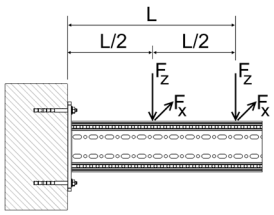

Anchor / L_{max}	Bolt Anchor AN BZ plus M12 hef. 70		Bolt Anchor AN BZ3 M12 hef. 125		Injection system VMZ-A M12x125	
	$F_{z,\,perm}$ for		$F_{z,\,perm}$ for		$F_{z,\,perm}$ for	
	$F_x = 0$	$F_x = \mu_0 * F_z$	$F_x = 0$	$F_x = \mu_0 * F_z$	$F_x = 0$	$F_x = \mu_0 * F_z$
[mm]	[kN]	[kN]	[kN]	[kN]	[kN]	[kN]
300	**4,49**	**4,49**	**5,36**	**5,36**	**6,21**	**6,21**
500	**3,47**	**3,47**	**4,28**	**4,28**	**5,34**	**5,34**
700	**2,83**	**2,83**	**3,57**	**3,57**	**4,68**	**4,68**
900	**2,39**	**2,39**	**3,06**	**3,06**	**4,16**	**4,16**
1100	**2,02**	**2,02**	**2,61**	**2,61**	**3,62**	**3,62**

F_z [kN] as permanent loads at distance L and L/2. F_x [kN] as variable loads at distance L and L/2.

3 Point Loads

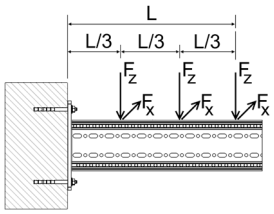

Anchor / L_{max}	Bolt Anchor AN BZ plus M12 hef. 70		Bolt Anchor AN BZ3 M12 hef. 125		Injection system VMZ-A M12x125	
	$F_{z,\,perm}$ for		$F_{z,\,perm}$ for		$F_{z,\,perm}$ for	
	$F_x = 0$	$F_x = \mu_0 * F_z$	$F_x = 0$	$F_x = \mu_0 * F_z$	$F_x = 0$	$F_x = \mu_0 * F_z$
[mm]	[kN]	[kN]	[kN]	[kN]	[kN]	[kN]
300	**3,15**	**3,15**	**3,73**	**3,73**	**4,25**	**4,25**
500	**2,47**	**2,47**	**3,02**	**3,02**	**3,70**	**3,70**
700	**2,03**	**2,03**	**2,54**	**2,54**	**3,28**	**3,28**
900	**1,73**	**1,73**	**2,19**	**2,19**	**2,94**	**2,94**
1100	**1,50**	**1,50**	**1,93**	**1,93**	**2,66**	**2,66**

F_z [kN] as permanent loads at distance L. 2*L/3 and L/3. F_x [kN] as variable loads at distance L. 2*L/3 and L/3.

Friction coefficient μ_0 = 0,2 for friction in longitudinal direction. Max. deviation L/100.
Max. permissible anchor loads according to EN 1992-4; Material: Steel galvanised. Cracked concrete C20/25 f_{ck} = 20 N/mm.
Min. component thickness and edge distances to be respected.

Working loads in accordance with Eurocode 3

L-Construction F 100/160 - F 100

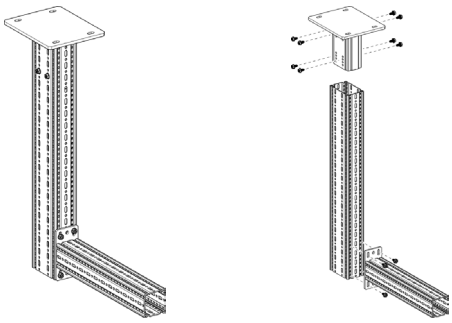

Part List
1 x End Support WBD-4KT 121/160-F100/160
1 x Beam Section TP F 100/160
1 x Cantilever Bracket AK F 100
12 x Self-Forming-Screw FLS F

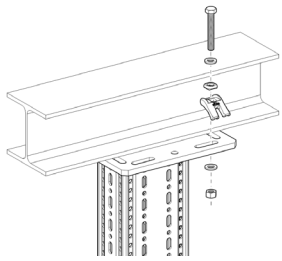

Note:
Unless otherwise stated, the information is based on installation using the Assembly Set MS 5P M12 S. If fixings are done using anchors, these must be verified separately.

Distributed Load

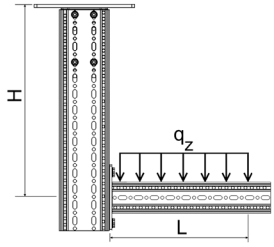

H_{max} \ L_{max}	300		500		700		900		1100	
	$q_{z.\,perm}$	F_z (q_z * L)	$q_{z.\,perm}$	F_z (q_z * L)	$q_{z.\,perm}$	F_z (q_z * L)	$q_{z.\,perm}$	F_z (q_z * L)	$q_{z.\,perm}$	F_z (q_z * L)
[mm]	[kN/m]	[kN]	[kN/m]	[kN]	[kN/m]	[kN]	[kN/m]	[kN]	[kN/m]	[kN]
1000	**24,81**	**7,44**	**10,83**	**5,42**	**6,02**	**4,21**	**3,81**	**3,43**	**2,55**	**2,80**
1500	**24,44**	**7,33**	**10,47**	**5,24**	**5,67**	**3,97**	**3,49**	**3,14**	**2,34**	**2,57**
2000	**22,26**	**6,68**	**9,60**	**4,80**	**5,22**	**3,65**	**3,23**	**2,90**	**2,16**	**2,38**
2500	**20,44**	**6,13**	**8,87**	**4,43**	**4,83**	**3,38**	**2,99**	**2,70**	**2,01**	**2,21**

q_z [kN/m] as permanent load over L.

Point Load

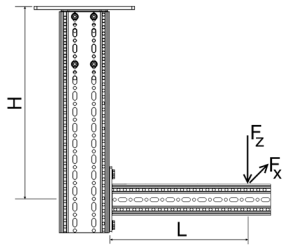

H_{max} \ L_{max}	300		500		700		900		1100	
	$F_{z.\,perm}$ for		$F_{z.\,perm}$ for		$F_{z.\,perm}$ for		$F_{z.\,perm}$ for		$F_{z.\,perm}$ for	
	$F_x = 0$	$F_x = \mu_0 * F_z$	$F_x = 0$	$F_x = \mu_0 * F_z$	$F_x = 0$	$F_x = \mu_0 * F_z$	$F_x = 0$	$F_x = \mu_0 * F_z$	$F_x = 0$	$F_x = \mu_0 * F_z$
[mm]	[kN]	[kN]	[kN]	[kN]	[kN]	[kN]	[kN]	[kN]	[kN]	[kN]
1000	**4,85**	**3,98**	**3,20**	**2,81**	**2,31**	**2,16**	**1,77**	**1,75**	**1,42**	**1,42**
1500	**4,61**	**3,67**	**2,96**	**2,65**	**2,14**	**2,06**	**1,64**	**1,64**	**1,32**	**1,32**
2000	**4,28**	**3,40**	**2,75**	**2,50**	**1,99**	**1,97**	**1,53**	**1,53**	**1,23**	**1,23**
2500	**4,00**	**3,16**	**2,57**	**2,37**	**1,86**	**1,86**	**1,43**	**1,43**	**1,15**	**1,15**

F_z [kN] as a permanent load at distance L. F_x [kN] as a variable load at distance L.

2 Point Loads

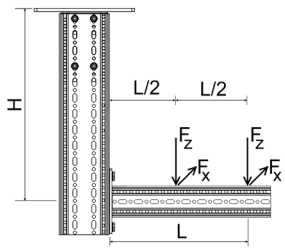

H_{max} \ L_{max}	300		500		700		900		1100	
	$F_{z.\,perm}$ for		$F_{z.\,perm}$ for		$F_{z.\,perm}$ for		$F_{z.\,perm}$ for		$F_{z.\,perm}$ for	
	$F_x = 0$	$F_x = \mu_0 * F_z$	$F_x = 0$	$F_x = \mu_0 * F_z$	$F_x = 0$	$F_x = \mu_0 * F_z$	$F_x = 0$	$F_x = \mu_0 * F_z$	$F_x = 0$	$F_x = \mu_0 * F_z$
[mm]	[kN]	[kN]	[kN]	[kN]	[kN]	[kN]	[kN]	[kN]	[kN]	[kN]
1000	**2,90**	**2,35**	**1,92**	**1,72**	**1,41**	**1,35**	**1,10**	**1,10**	**0,89**	**0,89**
1500	**2,64**	**2,14**	**1,77**	**1,60**	**1,30**	**1,27**	**1,01**	**1,01**	**0,82**	**0,82**
2000	**2,42**	**1,96**	**1,63**	**1,49**	**1,21**	**1,20**	**0,94**	**0,94**	**0,77**	**0,77**
2500	**2,24**	**1,79**	**1,52**	**1,40**	**1,12**	**1,12**	**0,88**	**0,88**	**0,72**	**0,72**

F_z [kN] as permanent loads at distance L and L/2. F_x [kN] as variable loads at distance L and L/2.

3 Point Loads

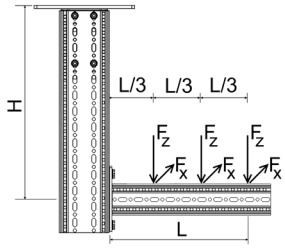

H_{max} \ L_{max}	300		500		700		900		1100	
	$F_{z.\,perm}$ for		$F_{z.\,perm}$ for		$F_{z.\,perm}$ for		$F_{z.\,perm}$ for		$F_{z.\,perm}$ for	
	$F_x = 0$	$F_x = \mu_0 * F_z$	$F_x = 0$	$F_x = \mu_0 * F_z$	$F_x = 0$	$F_x = \mu_0 * F_z$	$F_x = 0$	$F_x = \mu_0 * F_z$	$F_x = 0$	$F_x = \mu_0 * F_z$
[mm]	[kN]	[kN]	[kN]	[kN]	[kN]	[kN]	[kN]	[kN]	[kN]	[kN]
1000	**2,16**	**1,63**	**1,49**	**1,22**	**1,12**	**0,96**	**0,87**	**0,80**	**0,71**	**0,67**
1500	**2,03**	**1,48**	**1,38**	**1,13**	**1,02**	**0,91**	**0,80**	**0,76**	**0,65**	**0,64**
2000	**1,86**	**1,35**	**1,27**	**1,05**	**0,94**	**0,86**	**0,74**	**0,72**	**0,60**	**0,60**
2500	**1,71**	**1,19**	**1,17**	**0,98**	**0,88**	**0,81**	**0,69**	**0,68**	**0,56**	**0,56**

F_z [kN] as permanent loads at distance L. 2*L/3 and L/3. F_x [kN] as variable loads at distance L. 2*L/3 and L/3.

All illustrated structures are able to be installed standing as well.
Friction coefficient $\mu_0 = 0{,}2$ for friction in longitudinal direction. Max. deviation H/100; L/100.

03/2026

Working loads in accordance with Eurocode 3

Frame F 100/160 - F 100

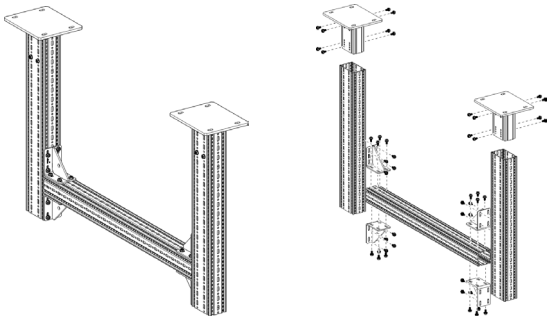

Part List
2 x End Support WBD-4KT 121/160-F100/160
2 x Beam Section TP F 100/160
1 x Beam Section TP F 100
4 x Corner Bracket WD F 100 140/140
48 x Self-Forming-Screw FLS F

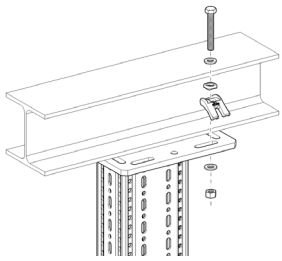

Note:
Unless otherwise stated, the information is based on installation using the Assembly Set MS 5P M12 S. If fixings are done using anchors, these must be verified separately.

Distributed Load

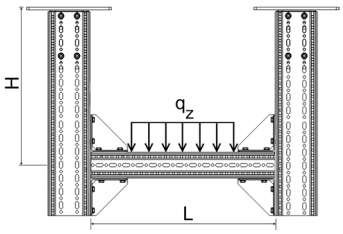

H_{max} \ L_{max}	1000		1500		2000		2500		3000		3500	
	$q_{z.\,perm}$	F_z (q_z * L)	$q_{z.\,perm}$	F_z (q_z * L)	$q_{z.\,perm}$	F_z (q_z * L)	$q_{z.\,perm}$	F_z (q_z * L)	$q_{z.\,perm}$	F_z (q_z * L)	$q_{z.\,perm}$	F_z (q_z * L)
[mm]	[kN/m]	[kN]	[kN/m]	[kN]	[kN/m]	[kN]	[kN/m]	[kN]	[kN/m]	[kN]	[kN/m]	[kN]
1000	**66,34**	**66,34**	**34,86**	**52,29**	**20,24**	**40,49**	**12,47**	**31,16**	**8,28**	**24,85**	**5,79**	**20,27**
1500	**65,47**	**65,47**	**34,28**	**51,42**	**19,93**	**39,86**	**12,28**	**30,70**	**8,19**	**24,56**	**5,71**	**19,99**
2000	**65,02**	**65,02**	**33,23**	**49,85**	**19,56**	**39,11**	**12,05**	**30,13**	**8,04**	**24,11**	**5,61**	**19,63**
2500	**61,91**	**61,91**	**32,60**	**48,90**	**18,94**	**37,87**	**11,83**	**29,56**	**7,89**	**23,66**	**5,40**	**18,92**
3000	**60,00**	**60,00**	**32,33**	**48,49**	**18,66**	**37,31**	**11,61**	**29,02**	**7,74**	**23,23**	**5,50**	**19,27**

q_z [kN/m] as permanent load over L.

Point Load

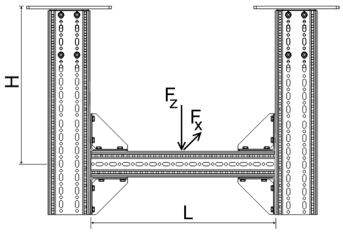

H_{max} \ L_{max}	1000		1500		2000		2500		3000		3500	
	$F_{z.\,perm}$ for		$F_{z.\,perm}$ for		$F_{z.\,perm}$ for		$F_{z.\,perm}$ for		$F_{z.\,perm}$ for		$F_{z.\,perm}$ for	
	$F_x = 0$	$F_x = \mu_0 * F_z$	$F_x = 0$	$F_x = \mu_0 * F_z$	$F_x = 0$	$F_x = \mu_0 * F_z$	$F_x = 0$	$F_x = \mu_0 * F_z$	$F_x = 0$	$F_x = \mu_0 * F_z$	$F_x = 0$	$F_x = \mu_0 * F_z$
[mm]	[kN]	[kN]	[kN]	[kN]	[kN]	[kN]	[kN]	[kN]	[kN]	[kN]	[kN]	[kN]
1000	**36,93**	**15,10**	**26,33**	**15,10**	**20,72**	**15,09**	**17,28**	**12,60**	**14,46**	**10,71**	**11,70**	**9,39**
1500	**36,75**	**10,26**	**26,23**	**10,21**	**20,65**	**10,16**	**17,17**	**10,10**	**14,28**	**9,95**	**11,56**	**8,91**
2000	**36,44**	**7,79**	**26,04**	**7,74**	**20,51**	**7,69**	**17,06**	**7,64**	**14,05**	**7,58**	**11,38**	**7,38**
2500	**35,95**	**6,28**	**25,83**	**6,24**	**20,35**	**6,20**	**16,94**	**6,15**	**13,83**	**6,10**	**11,20**	**6,05**
3000	**35,15**	**5,26**	**25,58**	**5,23**	**20,13**	**5,19**	**16,75**	**5,15**	**13,53**	**5,11**	**10,96**	**5,01**

F_z [kN] as a permanent load at distance L/2. F_x [kN] as a variable load at distance L/2.

2 Point Loads

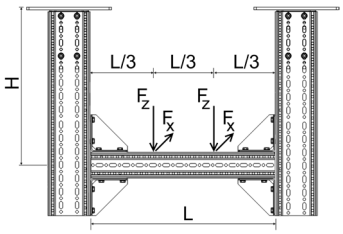

H_{max} \ L_{max}	1000		1500		2000		2500		3000		3500	
	$F_{z.\,perm}$ for		$F_{z.\,perm}$ for		$F_{z.\,perm}$ for		$F_{z.\,perm}$ for		$F_{z.\,perm}$ for		$F_{z.\,perm}$ for	
	$F_x = 0$	$F_x = \mu_0 * F_z$	$F_x = 0$	$F_x = \mu_0 * F_z$	$F_x = 0$	$F_x = \mu_0 * F_z$	$F_x = 0$	$F_x = \mu_0 * F_z$	$F_x = 0$	$F_x = \mu_0 * F_z$	$F_x = 0$	$F_x = \mu_0 * F_z$
[mm]	[kN]	[kN]	[kN]	[kN]	[kN]	[kN]	[kN]	[kN]	[kN]	[kN]	[kN]	[kN]
1000	**22,89**	**7,55**	**18,95**	**7,55**	**14,74**	**7,55**	**11,23**	**7,52**	**8,91**	**6,47**	**7,22**	**5,46**
1500	**22,54**	**5,13**	**18,65**	**5,11**	**14,52**	**5,09**	**11,06**	**5,06**	**8,78**	**5,03**	**7,12**	**4,69**
2000	**22,26**	**3,90**	**18,14**	**3,88**	**14,25**	**3,85**	**10,86**	**3,83**	**8,63**	**3,80**	**7,00**	**3,78**
2500	**21,45**	**3,14**	**17,80**	**3,12**	**13,84**	**3,11**	**10,66**	**3,08**	**8,47**	**3,06**	**6,87**	**3,04**
3000	**20,83**	**2,63**	**17,44**	**2,62**	**13,70**	**2,60**	**10,47**	**2,58**	**8,32**	**2,57**	**6,75**	**2,54**

F_z [kN] as permanent loads at distance 2*L/3 and L/3. F_x [kN] as variable loads at distance 2*L/3 and L/3.

3 Point Loads

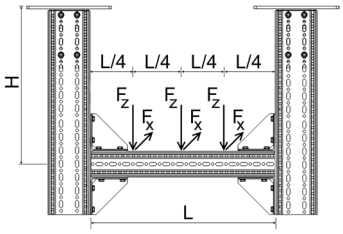

H_{max} \ L_{max}	1000		1500		2000		2500		3000		3500	
	$F_{z.\,perm}$ for		$F_{z.\,perm}$ for		$F_{z.\,perm}$ for		$F_{z.\,perm}$ for		$F_{z.\,perm}$ for		$F_{z.\,perm}$ for	
	$F_x = 0$	$F_x = \mu_0 * F_z$	$F_x = 0$	$F_x = \mu_0 * F_z$	$F_x = 0$	$F_x = \mu_0 * F_z$	$F_x = 0$	$F_x = \mu_0 * F_z$	$F_x = 0$	$F_x = \mu_0 * F_z$	$F_x = 0$	$F_x = \mu_0 * F_z$
[mm]	[kN]	[kN]	[kN]	[kN]	[kN]	[kN]	[kN]	[kN]	[kN]	[kN]	[kN]	[kN]
1000	**15,62**	**5,03**	**13,10**	**5,03**	**10,28**	**5,03**	**8,01**	**5,03**	**6,40**	**4,42**	**5,21**	**3,75**
1500	**15,34**	**3,42**	**12,89**	**3,41**	**10,13**	**3,39**	**7,90**	**3,38**	**6,31**	**3,36**	**5,14**	**3,18**
2000	**15,03**	**2,60**	**12,65**	**2,59**	**9,95**	**2,57**	**7,75**	**2,56**	**6,19**	**2,54**	**5,05**	**2,52**
2500	**14,70**	**2,10**	**12,39**	**2,08**	**9,75**	**2,07**	**7,61**	**2,06**	**6,08**	**2,05**	**4,96**	**2,03**
3000	**14,41**	**1,76**	**12,17**	**1,75**	**9,57**	**1,74**	**7,47**	**1,73**	**5,97**	**1,71**	**4,87**	**1,70**

F_z [kN] as permanent loads at distance 3*L/4. L/2 and L/4. F_x [kN] as variable loads at distance 3*L/4. L/2 and L/4.

All illustrated structures are able to be installed standing as well.
Friction coefficient $\mu_0 = 0{,}2$ for friction in longitudinal direction. Max. deviation H/100; L/200.

03/2026

siMotec 100 / 120 - Section data

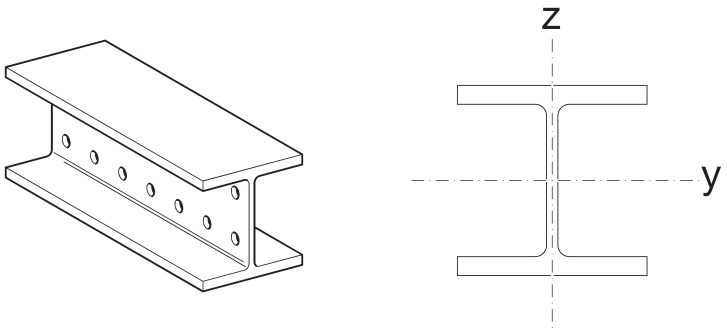

Type	Moment of Inertia [cm⁴]		Section Modulus [cm³]		Radius of Inertia [cm]		Torsional Moment [cm⁴]	Cross Section [cm²]	Weight [kg/m]
	I_y	I_z	W_y	W_z	i_y	i_z	It	A	G
H 100	**341**	**133**	**71,0**	**26,7**	**4,14**	**2,59**	**5,15**	**19,9**	**16,40**
HEA 100	349	134	72,8	26,8	4,06	2,51	5,26	21,2	16,70
H 120	**853**	**317**	**142,0**	**52,8**	**5,13**	**3,13**	**13,66**	**32,3**	**26,50**
HEB 120	864	318	144,0	52,9	5,04	3,06	13,90	34,0	26,70

Note
HEA 100 = IPBI 100 as per DIN 1025 Part 3: 1994-03: B100; H 96; Flange 8; Web 5 (EN 53)
HEB 120 = HE 120 B as per DIN EN 10365: 2017-05: B120; H120; Flange11; Web 6,5 (EN 53)

Sikla Beam Sections H 100 and H 120 are hot-dipped-galvanized as per DIN EN ISO 1461.

Tightening torque for typical connections

Bracket Plates FV 100/120

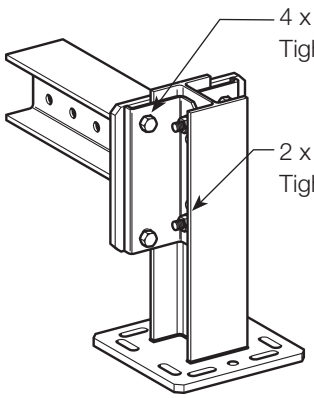

Assembly Set MS 5P M12 S

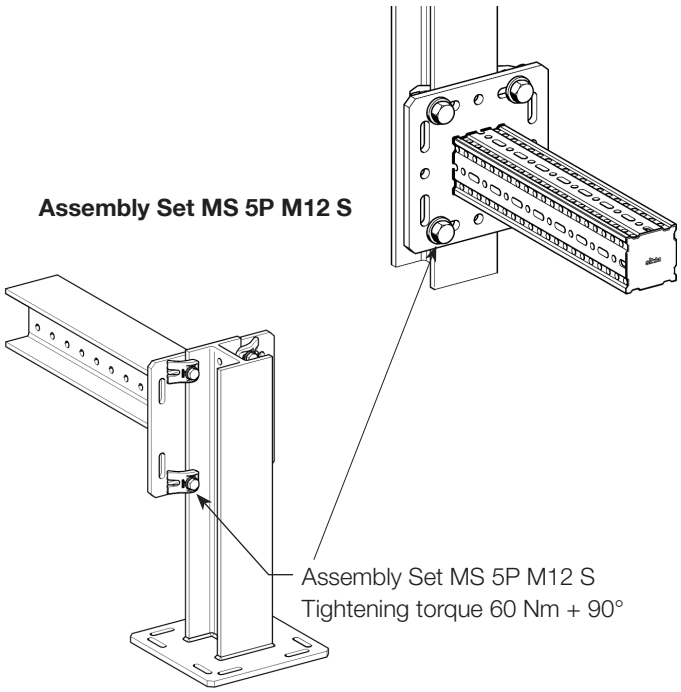

Working loads in accordance with Eurocode 3

Beam Section 100

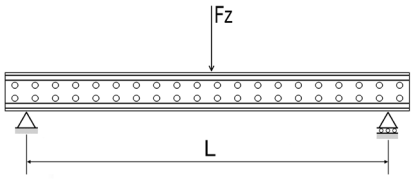

L_{max}	$F_{z.\ perm}$
[mm]	[kN]
1000	**50,0**
1600	**31,0**
2000	**24,5**
3000	**15,0**
4000	**10,5**
5000	**7,8**
6000	**5,9**

F_z [kN] as a permanent load at L/2.
Max. Bending L/150.

Part List
Beam Section TP 100.
Single-span beam with uniaxial load.

L-Construction 100 - Bracket Plates FV

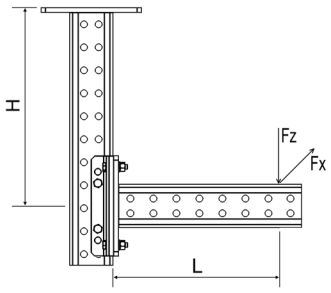

H_{max} \ L_{max}	200		600		1000	
	$F_{z.\ perm}$ for		$F_{z.\ perm}$ for		$F_{z.\ perm}$ for	
	$F_x = 0$	$F_x = \mu_0 * F_z$	$F_x = 0$	$F_x = \mu_0 * F_z$	$F_x = 0$	$F_x = \mu_0 * F_z$
[mm]	[kN]	[kN]	[kN]	[kN]	[kN]	[kN]
500	**4,35**	**1,73**	**1,56**	**0,64**	**0,93**	**0,38**
1000	**4,35**	**0,75**	**1,56**	**0,31**	**0,90**	**0,18**
1500	**4,35**	**0,40**	**1,36**	**0,18**	**0,80**	**0,11**

F_z [kN] as a permanent load. F_x [kN] as a variable load.
Max Deviation H/150; L/150.

Part List
2 x Beam Bracket TKO 100
1 x Bracket Plates FV 100/120

L-Construction 100 - Assembly Set MS

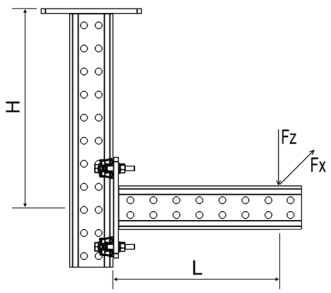

H_{max} \ L_{max}	200		600		1000	
	$F_{z.\ perm}$ for		$F_{z.\ perm}$ for		$F_{z.\ perm}$ for	
	$F_x = 0$	$F_x = \mu_0 * F_z$	$F_x = 0$	$F_x = \mu_0 * F_z$	$F_x = 0$	$F_x = \mu_0 * F_z$
[mm]	[kN]	[kN]	[kN]	[kN]	[kN]	[kN]
500	**3,51**	**3,22**	**2,67**	**1,54**	**2,13**	**0,95**
1000	**3,51**	**0,96**	**2,67**	**0,43**	**2,13**	**0,27**
1500	**3,51**	**0,46**	**2,59**	**0,22**	**1,79**	**0,14**

F_z [kN] as a permanent load. F_x [kN] as a variable load.
Max Deviation H/150; L/150.

Part List
2 x Beam Bracket TKO 100
1 x Assembly Set MS 5P M12 S

The attachment to the primary structure must be calculated separately.
Friction coefficient $\mu_0 = 0{,}2$ for friction in longitudinal direction.

Working loads in accordance with Eurocode 3

Frame 100 - Bracket Plates FV

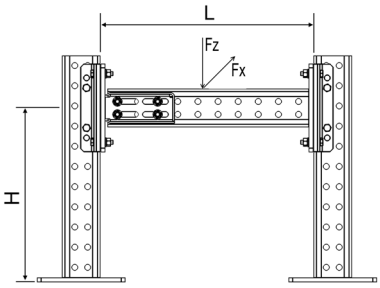

H_{max} \ L_{max}	500		1000		2000	
	$F_{z.\,perm}$ for		$F_{z.\,perm}$ for		$F_{z.\,perm}$ for	
	$F_x = 0$	$F_x = \mu_0 * F_z$	$F_x = 0$	$F_x = \mu_0 * F_z$	$F_x = 0$	$F_x = \mu_0 * F_z$
[mm]	[kN]	[kN]	[kN]	[kN]	[kN]	[kN]
500	**16,5**	**15,1**	**16,4**	**15,0**	**16,3**	**9,9**
1000	**16,5**	**15,1**	**16,4**	**15,0**	**16,3**	**9,9**
1500	**16,5**	**15,1**	**16,4**	**15,0**	**16,3**	**9,9**

F_z [kN] as a permanent load. F_x [kN] as a variable load.
max. Bending L/150. max. Deviation H/150.

Part List
3 x Beam Bracket TKO 100
1 x End Support STA 100
2 x Bracket Plates FV 100/120

Frame 100 - Assembly Set MS

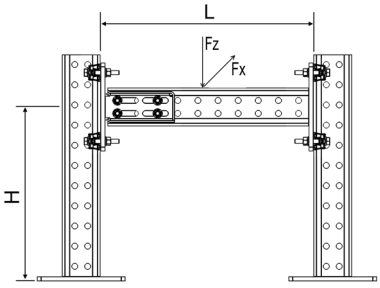

H_{max} \ L_{max}	500		1000		2000	
	$F_{z.\,perm}$ for		$F_{z.\,perm}$ for		$F_{z.\,perm}$ for	
	$F_x = 0$	$F_x = \mu_0 * F_z$	$F_x = 0$	$F_x = \mu_0 * F_z$	$F_x = 0$	$F_x = \mu_0 * F_z$
[mm]	[kN]	[kN]	[kN]	[kN]	[kN]	[kN]
500	**8,2**	**8,0**	**8,1**	**7,9**	**8,0**	**7,8**
1000	**8,2**	**8,0**	**8,1**	**7,9**	**8,0**	**7,8**
1500	**8,2**	**8,0**	**8,1**	**7,9**	**8,0**	**7,8**

F_z [kN] as a permanent load. F_x [kN] as a variable load.
max. Bending L/150. max. Deviation H/150.

Part List
3 x Beam Bracket TKO 100
1 x End Support STA 100
2 x Assembly Set MS 5P M12 S

T-Support 100

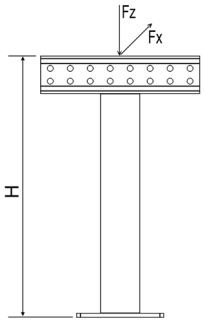

H_{max}	$F_{z.\,perm}$ for	
	$F_x = 0$	$F_x = \mu_0 * F_z$
[mm]	[kN]	[kN]
200	**13,0**	**13,0**
600	**13,0**	**13,0**
1000	**13,0**	**13,0**
1400	**13,0**	**13,0**
2000	**13,0**	**9,5**

F_z [kN] as a permanent load. F_x [kN] as a variable load.
Central load introduction for planned eccentricity ± 50 mm.
Max. Deviation H/150.

Part List
1 x Beam Bracket TKO 100
1 x T-Adapter TA 100

The attachment to the primary structure must be calculated separately.
Friction coefficient $\mu_0 = 0{,}2$ for friction in longitudinal direction.

Working loads in accordance with Eurocode 3

Beam Bracket 100

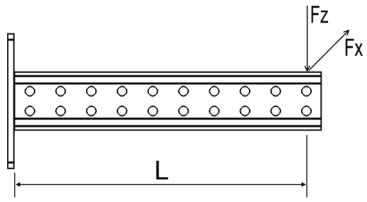

L_{max}	$F_{z,\,perm}$ for $F_x = 0$	$F_x = \mu_0 * F_z$
[mm]	[kN]	[kN]
200	**3,51**	**3,22**
400	**3,03**	**2,62**
600	**2,67**	**2,21**
800	**2,37**	**1,90**
1000	**2,13**	**1,67**
1400	**1,76**	**1,33**
2000	**1,36**	**0,99**

F_z [kN] as a permanent load. F_x [kN] as a variable load.
Max. Bending H/150.

Part List
1 x Beam Bracket TKO 100
Connection with Assembly Set MS 5P M12 S

Joining Beam Bracket 100

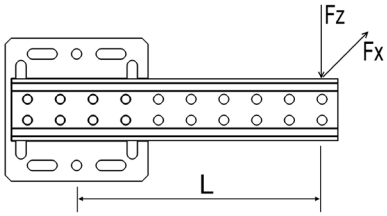

Connection with Assembly Set
MS 5P M12 S / M16 S

L_{max}	$F_{z,\,perm}$ for $F_x = 0$	$F_x = \mu_0 * F_z$
[mm]	[kN]	[kN]
300	**0,62**	**0,61**
500	**0,37**	**0,36**
700	**0,24**	**0,24**

Connection with
Bracket Plates

L_{max}	$F_{z,\,perm}$ for $F_x = 0$	$F_x = \mu_0 * F_z$
[mm]	[kN]	[kN]
300	**1,48**	**1,48**
500	**0,93**	**0,93**
700	**0,66**	**0,66**

F_z [kN] as a permanent load. F_x [kN] as a variable load.
Max. Bending L/150.

Part List
1 x Joining Beam Bracket QKO-Q 100

Angled Beam Bracket 100

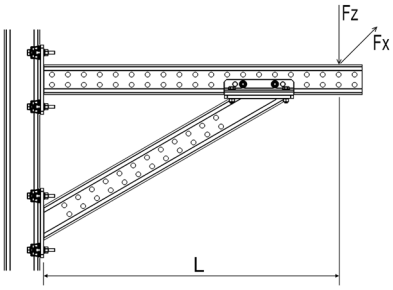

Inclined to the horizontal
Bracket with 30°

L_{max}	$F_{z,\,perm}$ for $F_x = 0$	$F_x = \mu_0 * F_z$
[mm]	[kN]	[kN]
1000	**2,70**	**2,70**
678	**4,00**	**4,00**

F_z [kN] as a permanent load. F_x [kN] as a variable load.
Max. Bending L/150.

Part List
1 x Beam Bracket TKO 100
1 x Angled Beam Bracket SKO 1
2 x Assembly Set MS 5P M12 S
1 x Bracket Plates FV 100/120

The attachment to the primary structure must be calculated separately.
Friction coefficient $\mu_0 = 0{,}2$ for friction in longitudinal direction.

Working loads in accordance with Eurocode 3

Beam Section 120

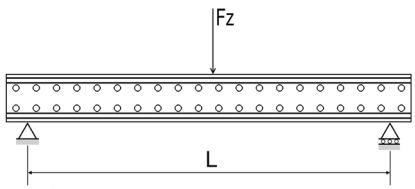

L_{max}	$F_{z.\ perm}$
[mm]	[kN]
1000	**98,5**
1600	**61,5**
2000	**49,5**
3000	**31,5**
4000	**22,3**
5000	**16,8**
6000	**13,0**

F_z [kN] as a permanent load.
Max. Bending L/150.

Part List
Beam Section TP 100.
Single-span beam with uniaxial load.

L-Construction 120 - Bracket Plates FV

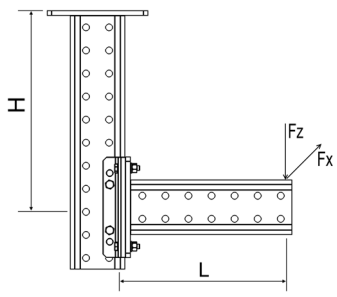

L_{max} / H_{max}	200		600		1000	
	$F_{z.\ perm}$ for		$F_{z.\ perm}$ for		$F_{z.\ perm}$ for	
	$F_x = 0$	$F_x = \mu_0 * F_z$	$F_x = 0$	$F_x = \mu_0 * F_z$	$F_x = 0$	$F_x = \mu_0 * F_z$
[mm]	[kN]	[kN]	[kN]	[kN]	[kN]	[kN]
500	**4,35**	**2,43**	**1,59**	**0,85**	**0,96**	**0,50**
1000	**4,35**	**1,45**	**1,59**	**0,57**	**0,96**	**0,34**
1500	**4,35**	**0,88**	**1,59**	**0,40**	**0,96**	**0,24**

F_z [kN] as a permanent load. F_x [kN] as a variable load.
Max. Bending H/150; L/150.

Part List
2 x Beam Bracket TKO 120
1 x Bracket Plates FV 100/120

L-Construction 120 - Assembly Set MS

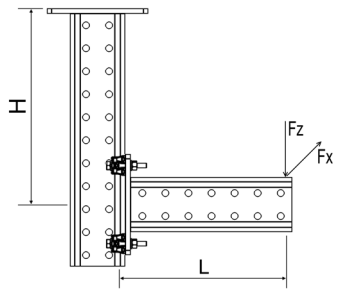

L_{max} / H_{max}	200		600		1000	
	$F_{z.\ perm}$ for		$F_{z.\ perm}$ for		$F_{z.\ perm}$ for	
	$F_x = 0$	$F_x = \mu_0 * F_z$	$F_x = 0$	$F_x = \mu_0 * F_z$	$F_x = 0$	$F_x = \mu_0 * F_z$
[mm]	[kN]	[kN]	[kN]	[kN]	[kN]	[kN]
500	**3,61**	**3,35**	**2,86**	**2,41**	**2,34**	**1,86**
1000	**3,61**	**2,59**	**2,86**	**1,23**	**2,34**	**0,78**
1500	**3,61**	**1,18**	**2,86**	**0,62**	**2,34**	**0,39**

F_z [kN] as a permanent load. F_x [kN] as a variable load.
Max. Bending H/150; L/150.

Part List
2 x Beam Bracket TKO 120
1 x Assembly Set MS 5P M12 S

The attachment to the primary structure must be calculated separately.
Friction coefficient $\mu_0 = 0{,}2$ for friction in longitudinal direction.

Working loads in accordance with Eurocode 3

Frame 120 - Bracket Plates FV

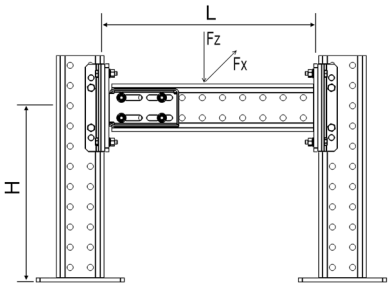

L_{max} / H_{max}	500		1000		2000	
	$F_{z.\,perm}$ for		$F_{z.\,perm}$ for		$F_{z.\,perm}$ for	
	$F_x = 0$	$F_x = \mu_0 * F_z$	$F_x = 0$	$F_x = \mu_0 * F_z$	$F_x = 0$	$F_x = \mu_0 * F_z$
[mm]	[kN]	[kN]	[kN]	[kN]	[kN]	[kN]
500	**16,5**	**15,1**	**16,3**	**14,9**	**16,1**	**14,7**
1000	**16,5**	**15,1**	**16,3**	**14,9**	**16,1**	**14,7**
1500	**16,5**	**15,1**	**16,3**	**14,9**	**16,1**	**14,7**

F_z [kN] as a permanent load. F_x [kN] as a variable load.
Max. Bending L/150. Max. Deviation H/150.

Part List
3 x Beam Bracket TKO 120
1 x End Support STA 120
2 x Bracket Plates FV 100/120

Frame 120 - Assembly Set MS

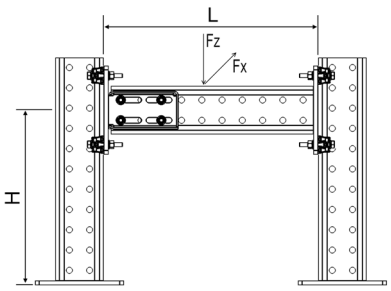

L_{max} / H_{max}	500		1000		2000	
	$F_{z.\,perm}$ for		$F_{z.\,perm}$ for		$F_{z.\,perm}$ for	
	$F_x = 0$	$F_x = \mu_0 * F_z$	$F_x = 0$	$F_x = \mu_0 * F_z$	$F_x = 0$	$F_x = \mu_0 * F_z$
[mm]	[kN]	[kN]	[kN]	[kN]	[kN]	[kN]
500	**8,2**	**8,0**	**8,0**	**7,8**	**7,8**	**7,6**
1000	**8,2**	**8,0**	**8,0**	**7,8**	**7,8**	**7,6**
1500	**8,2**	**8,0**	**8,0**	**7,8**	**7,8**	**7,6**

F_z [kN] as a permanent load. F_x [kN] as a variable load.
Max. Bending L/150. Max. Deviation H/150.

Part List
3 x Beam Bracket TKO 120
1 x End Support STA 120
2 x Assembly Set MS 5P M12 S

T-Support 120

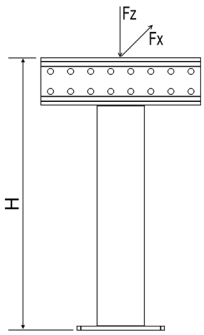

H_{max}	$F_{z.\,perm}$ for	
	$F_x = 0$	$F_x = \mu_0 * F_z$
[mm]	[kN]	[kN]
200	**23,6**	**23,6**
600	**23,6**	**23,6**
1000	**23,6**	**23,6**
1400	**23,6**	**21,6**
2000	**23,6**	**15,9**

F_z [kN] as a permanent load. F_x [kN] as a variable load.
Central load introduction for planned eccentricity ± 50 mm.
Max. Deviation H/150.

Part List
1 x Beam Bracket TKO 120
1 x T-Adapter TA 120

The attachment to the primary structure must be calculated separately.
Friction coefficient $\mu_0 = 0{,}2$ for friction in longitudinal direction.

Working loads in accordance with Eurocode 3

Beam Bracket 120

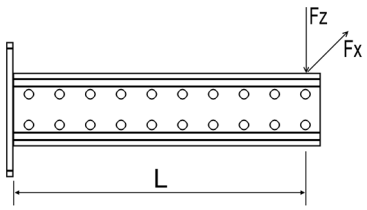

L_{max}	$F_{z.\ perm}$ for $F_x = 0$	$F_x = \mu_0 * F_z$
[mm]	[kN]	[kN]
200	**3,61**	**3,35**
400	**3,20**	**2,81**
600	**2,86**	**2,41**
800	**2,57**	**2,10**
1000	**2,34**	**1,86**
1400	**1,95**	**1,49**
2000	**1,52**	**1,12**

F_z [kN] as a permanent load. F_x [kN] as a variable load.
Max. Bending L/150.

Part List
1 x Beam Bracket TKO 120
Connection with Assembly Set MS 5P M12 S

Joining Beam Bracket 120

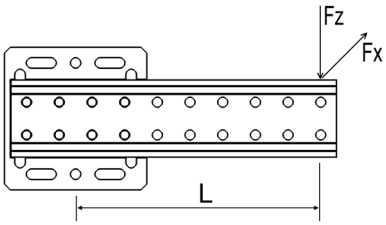

Connection with Assembly Set
MS 5P M12 S / M16 S

L_{max}	$F_{z.\ perm}$ for $F_x = 0$	$F_x = \mu_0 * F_z$
[mm]	[kN]	[kN]
300	**0,72**	**0,69**
500	**0,44**	**0,40**
700	**0,29**	**0,25**

Connection with
Bracket Plates FV

L_{max}	$F_{z.\ perm}$ for $F_x = 0$	$F_x = \mu_0 * F_z$
[mm]	[kN]	[kN]
300	**1,46**	**1,46**
500	**0,90**	**0,90**
700	**0,62**	**0,62**

F_z [kN] as a permanent load. F_x [kN] as a variable load.
Max. Bending L/150.

Part List
1 x Joining Beam Bracket QKO-Q 120

Schrägkonsole 120

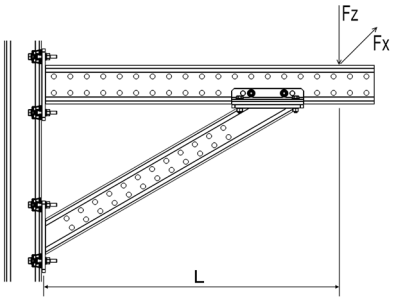

Schrägkonsole gegen
Horizontale mit 30°

L_{max}	$F_{z.\ perm}$ for $F_x = 0$	$F_x = \mu_0 * F_z$
[mm]	[kN]	[kN]
1000	**2,70**	**2,70**
678	**4,00**	**4,00**

F_z [kN] as a permanent load. F_x [kN] as a variable load.
Max. Bending L/150.

Part List
1 x Beam Bracket TKO 120
1 x Angled Beam Bracket SKO 100
2 x Assembly Set MS 5P M12 S
1 x Bracket Plates FV 100/120

The attachment to the primary structure must be calculated separately.
Friction coefficient $\mu_0 = 0{,}2$ for friction in longitudinal direction.

Supports (Pipe Shoes)

Application

The Sikla height- adjustable Supports (Pipe Shoes; HV 90, HV 150, HV 200) can be used as a Skid, a Guide or as a Fixed Point. The testing process of the individual Support types and the determination of the direction dependent permissible loads was carried out by the independent testing house TÜV Rheinland (Certificate number 01 220 173 / Sikla 01-2024).

Conformity

The Sikla Supports (Pipe Shoes) therefore fulfill DIN EN 13480-3:2024-12.
These are designed and calculated in accordance with Eurocode, as set out in Section 13.11.11 ('Alternative rules for the design and fabrication of pipe supports').
The pipe supports are manufactured in accordance with DIN EN 1090-2:2018+A1:2024 (EXC2).

Installation

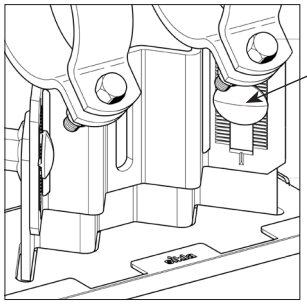

Special screws for height- adjustable connection of lower and upper Pipe Shoe components. Tightening torque: 80 Nm

By combining **Pipe Shoe LA or LC** with the steel supporting structure and connecting parts below:

siFramo			
Guiding Support	Guiding Support and single-sided Axial stop	Guiding Support and Axial stop on both sides	Fixed Point
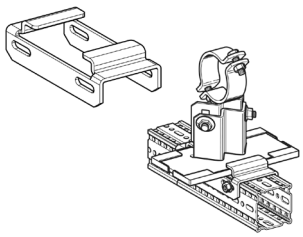	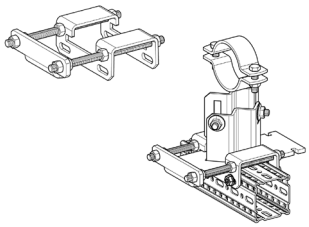	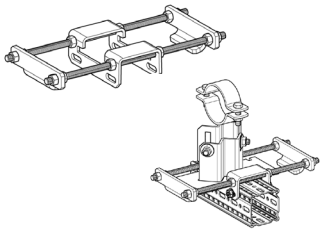	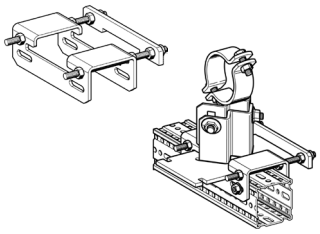
+ Guiding Bracket FW F	**+ Axial Stop AS F**	**+ Axial Stop Variable VAS F**	**+ Fixed Point Bracket XW F**

Beam section			
Guiding Support	Guiding Support and single-sided Axial stop	Guiding Support and Axial stop on both sides	Fixed Point
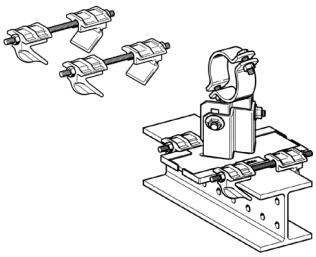	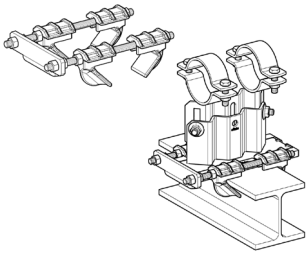	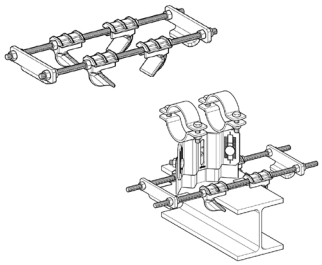	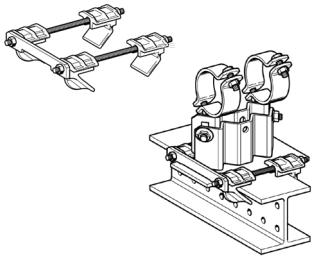
+ Guiding Set FS	**+ Axial stop AS**	**+ Axial Stop Variable VAS**	**+ Fixed Point Set XS**

The dimension of the existing steel beam determines the required type of connection kit.
Can be installed on steel beams with flange width ≤ 300 mm and flange thickness ≤ 30 mm.

Notes on the following working load tables

The load values apply to pipe shoes from the HCP range as well as to the high temperature pipe shoes.
The load values are based on room temperature.

For higher temperatures, the corresponding temperature correction values according to the attached table must be taken into account.

Axial fixed point forces $\mathbf{F_x}$ can only be attained by the professional use of anti-slip protections (e.g. cleats, stoppers). Those have to be planned during the design of the piping and are on the responsibilty of the piping manufacturer. To use our fixed point sets, fixed point angles and axial stops, it is necessary to dismantle the sliding plate, so a friction value of **μ** = 0,3 should be taken into account for the pipe static consideration.

The tests for lifting forces - $\mathbf{F_z}$ were performed using a combination of a pipe shoe LA - HV an a guiding or fixed points sets.
This results in the values for - $\mathbf{F_z}$ in the following combinations:

- beam connection with the **FS** guiding set or the **XS** fixed point set.
- cell Connection to siFramo with the guiding bracket **FW F** or the fixed point bracket **XW F**

Further statical product datas are available on request.

Design temperatures of pipe support components

The media temperature t_f has an influence on the system of the pipe support components.
Acc. to DIN EN 13480-3[1] *„all components of the pipe support have to be designed based on a range of temperature from 0°C to 80°C. if the ambient or operating temperatures of the pipework system are outside of this range, the relevant temperatures must be specified to the manufacturer of the pipe supports.“*

During the design of pipe supports, components are basically assigned into 2 groups: inside and outside of insulation.

For all components being placed inside of an insulation the following values apply[2]:

Kind of component	Design temperature of the support t
Straps, pipe clamps and welded components with extensive contact to the piping system	max (80°C; t_c)
Components not in contact with the piping system	max (80°C; t_c - 20°C)
Screws, nuts, etc.	max (80°C; t_c - 20°C)
Here, t_c is the design temperature of the pipework or the temperature of the fluid in the pipework.	

For all components being placed outside of the insulation the following values apply[3]:

Kind of component	Design temperature of the support t
Components in direct contact with the pipe	max (80°C; 0,5 t_c)
Screws, nuts, etc.	max (80°C; 0,33 t_c)
Here, t_c is the design temperature of the pipework or the temperature of the fluid in the pipework.	

For clarification of the tables see the graphical illustration[4]:

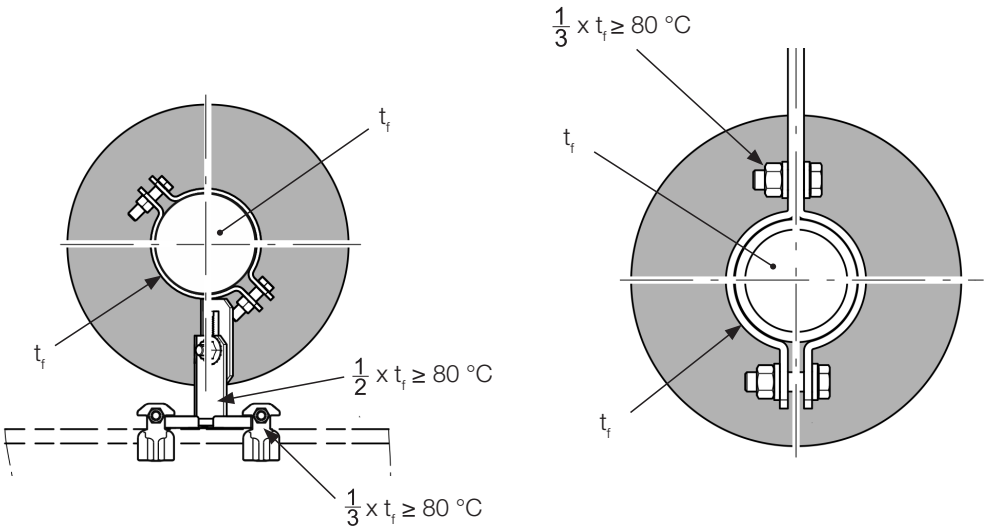

[1] Compare DIN EN 13480-3:2024-12, Chapter 13.11.2.1
[2] Compare DIN EN 13480-3:2024-12, Table 13.11.2-1
[3] Compare DIN EN 13480-3:2024-12, Table 13.11.2-2
[4] Compare DIN EN 13480-3:2024-12, Image 13.11.2-1

Correction values for pipe support components

The working loads of the SIKLA pipe shoes LA, LC and LD as well as for the rod hangers are valid for component temperatures up to 80°C. If components are getting warmer than 80 °C in service, the stated working loads have to be added with the correction value k to reduce the working loads. Because SIKLA pipe support components are manufactured with steel grade S235JR (or higher), the appropriate correction value has to be applied.

Correction val k depending on the temperature:

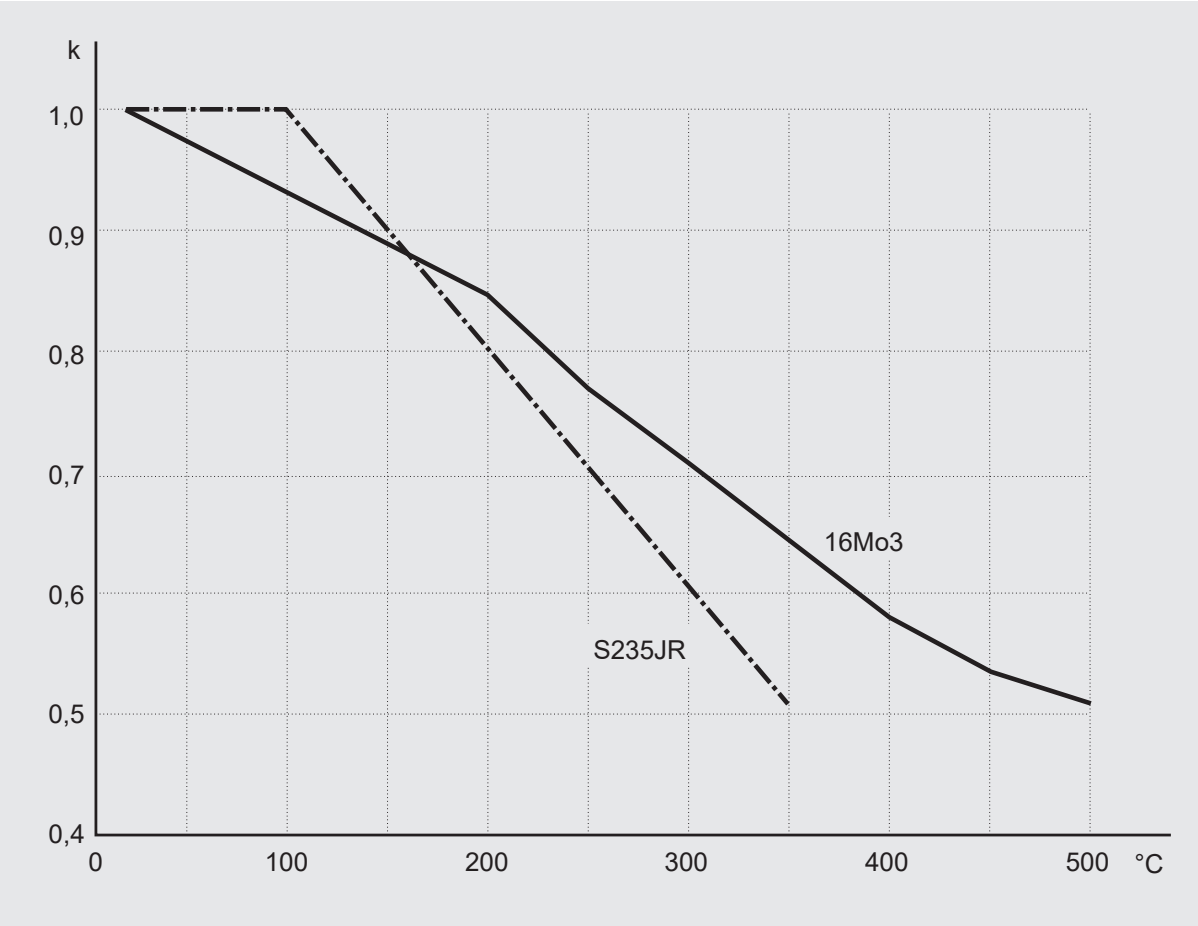

Correction values and practical application

$F_{perm} \geq F_{exist}$

$(F_{perm} = F_{R,20°C} * k) \geq F_{exist}$

F_{perm}	permissible load of Sikla pipe shoe at temperature t_x [°C]
F_{exist}	pipe load according to structural analysis
$F_{R,20°C}$	permissible load of Sikla pipe shoe at 20 °C
k	correction value

Temperature t [°C]	Correction value k	
	16Mo3	S235JR
20	1,00	1,00
80	0,95	1,00
100	0,93	1,00
150	0,89	0,90
200	0,85	0,81
250	0,77	0,71
300	0,71	0,61
350	0,64	0,52
400	0,58	-
450	0,53	-
500	0,51	-

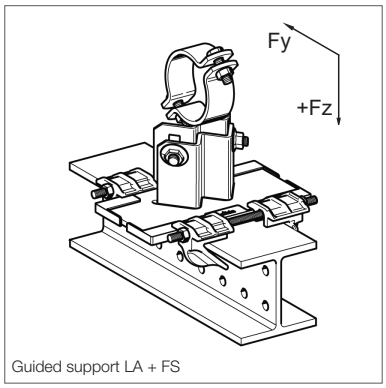

Guided support LA + FS

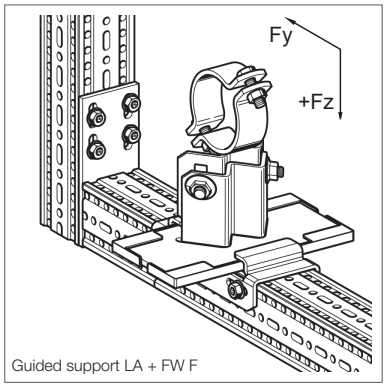

Guided support LA + FW F

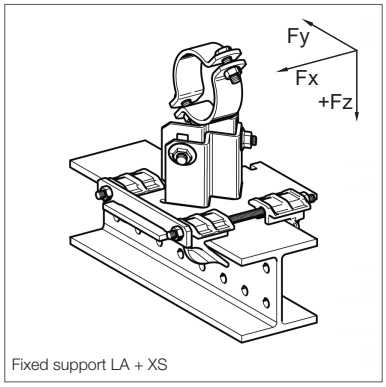

Fixed support LA + XS

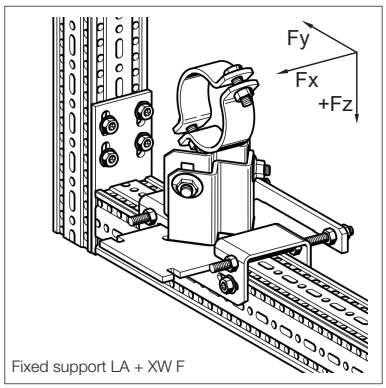

Fixed support LA + XW F

Working loads for Pipe Shoes LA, LC and LD - HV / DN sizes

Pipe Shoe LA - HV + Guiding Set FS resp. Fixed Point Set XS
Pipe Shoe LA - HV + Guiding Bracket FW F resp. Fixed Point Bracket XW F

Basis of assessment EC 3, working loads for Pipe Shoes as delivered.
Please note the information on page 59 about the working loads.

DN sizes

* only for fixed supports

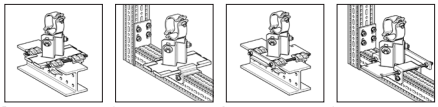

LA - HV	DN	F_x * [kN]	F_y [kN]	+ F_z [kN]	- F_z FS 80/120 [kN]	- F_z FW F [kN]	- F_z XS 80/120 [kN]	- F_z XW F [kN]
90	≤ 25	9,7	7,4	15,4	14	6,1	15,4	15,4
90	32	9,4	7,1	15,4	14	6,1	15,4	15,4
90	40	9,2	7	15,4	14	6,1	15,4	15,4
90	50	8,8	6,7	15,4	14	6,1	15,4	15,4
90	65	8,3	6,2	15,4	14	6,1	15,4	15,4
90	80	7,9	5,9	15,4	14	6,1	15,4	15,4
90	100	7,1	5,1	15,4	14	6,1	15,4	15,4
90	125	6,3	4,4	15,4	14	6,1	15,4	15,4
90	150	5,4	3,6	15,4	14	6,1	15,4	15,4
150	≤ 25	8,1	5,4	15,4	14	6,1	15,4	15,4
150	32	8	5,2	15,4	14	6,1	15,4	15,4
150	40	7,9	5,1	15,4	14	6,1	15,4	15,4
150	50	7,7	4,8	15,4	14	6,1	15,4	15,4
150	65	7,4	4,5	15,4	14	6,1	15,4	15,4
150	80	7,3	4,3	15,4	14	6,1	15,4	15,4
150	100	6,9	3,7	15,4	14	6,1	15,4	15,4
150	125	6,5	3,2	15,4	14	6,1	15,4	15,4
150	150	6,1	2,6	15,4	14	6,1	15,4	15,4
200	≤ 25	6,6	4,9	15,4	14	6,1	15,4	15,4
200	32	6,4	4,7	15,4	14	6,1	15,4	15,4
200	40	6,4	4,7	15,4	14	6,1	15,4	15,4
200	50	6,3	4,5	15,4	14	6,1	15,4	15,4
200	65	6,1	4,2	15,4	14	6,1	15,4	15,4
200	80	6	4,1	15,4	14	6,1	15,4	15,4
200	100	5,7	3,7	15,4	14	6,1	15,4	15,4
200	125	5,4	3,3	15,4	14	6,1	15,4	15,4
200	150	5,1	2,8	15,4	14	6,1	15,4	15,4

TÜVRheinland CERTIFIED
Regular Production Surveillance
www.tuv.com
ID 0000080821

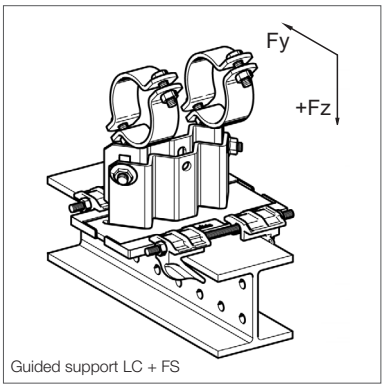

Guided support LC + FS

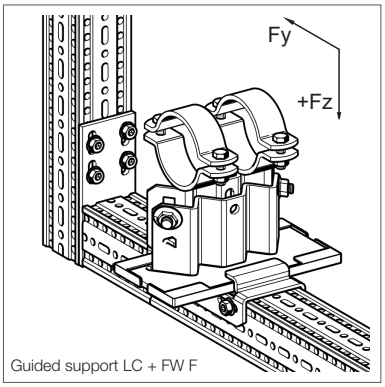

Guided support LC + FW F

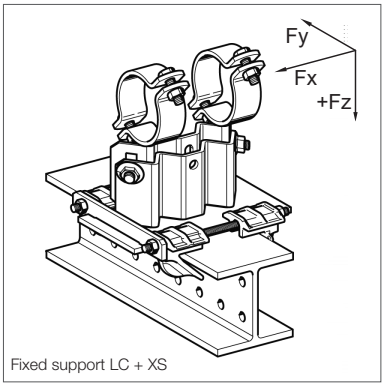

Fixed support LC + XS

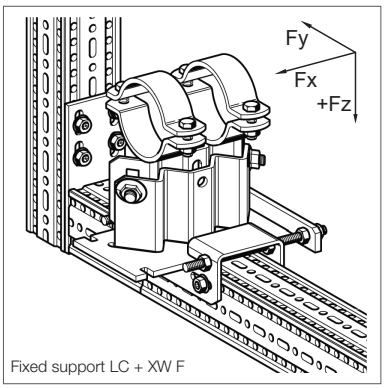

Fixed support LC + XW F

Pipe Shoe LC - HV + Guiding Set FS resp. Fixed Point Set XS
Pipe Shoe LC - HV + Guiding Bracket FW F resp. Fixed Point Bracket XW F

Basis of assessment EC 3, working loads for Pipe Shoes as delivered.
Please note the information on page 59 about the working loads.

DN sizes

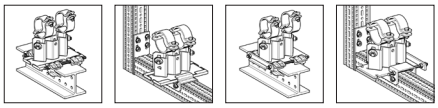

* only for fixed supports

LC - HV	DN	F_x * [kN]	F_y [kN]	$+F_z$ [kN]	$-F_z$ FS 80/120 [kN]	$-F_z$ FW F [kN]	$-F_z$ XS 80/120 [kN]	$-F_z$ XW F [kN]
90	≤ 25	11,4	6,4	17,0	14	6,1	17	17
90	32	11,3	6,2	17,0	14	6,1	17	17
90	40	11,3	6,1	17,0	14	6,1	17	17
90	50	11,2	5,9	17,0	14	6,1	17	17
90	65	11,1	5,6	17,0	14	6,1	17	17
90	80	11,1	5,4	17,0	14	6,1	17	17
90	100	10,9	5	17,0	14	6,1	17	17
90	125	10,8	4,6	17,0	14	6,1	17	17
90	150	10,6	4	17,0	14	6,1	17	17
90	200	10,3	3,1	17,0	14	6,1	17	17
90	250	9,9	2,2	17,0	14	6,1	17	17
90	300	9,6	1,4	17,0	14	6,1	17	17
150	≤ 25	8,6	4,7	17,0	14	6,1	17	17
150	32	8,6	4,6	17,0	14	6,1	17	17
150	40	8,6	4,6	17,0	14	6,1	17	17
150	50	8,5	4,4	17,0	14	6,1	17	17
150	65	8,5	4,2	17,0	14	6,1	17	17
150	80	8,5	4,1	17,0	14	6,1	17	17
150	100	8,4	3,8	17,0	14	6,1	17	17
150	125	8,3	3,5	17,0	14	6,1	17	17
150	150	8,3	3,2	17,0	14	6,1	17	17
150	200	8,1	2,7	17,0	14	6,1	17	17
150	250	8	2,1	17,0	14	6,1	17	17
150	300	7,9	1,5	17,0	14	6,1	17	17
200	≤ 25	7,4	5	17,0	14	6,1	17	17
200	32	7,4	4,9	17,0	14	6,1	17	17
200	40	7,4	4,8	17,0	14	6,1	17	17
200	50	7,4	4,7	17,0	14	6,1	17	17
200	65	7,3	4,5	17,0	14	6,1	17	17
200	80	7,3	4,4	17,0	14	6,1	17	17
200	100	7,3	4,1	17,0	14	6,1	17	17
200	125	7,2	3,8	17,0	14	6,1	17	17
200	150	7,2	3,5	17,0	14	6,1	17	17
200	200	7,1	2,9	17,0	14	6,1	17	17
200	250	7	2,3	17,0	14	6,1	17	17
200	300	7	1,7	17,0	14	6,1	17	17

TÜVRheinland CERTIFIED
Regular Production Surveillance
www.tuv.com
ID 0000080821

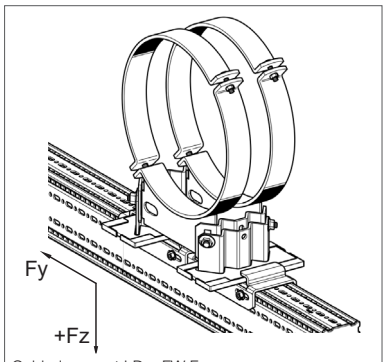

Guided support LD + FW F

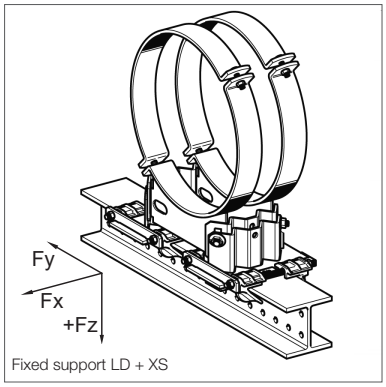

Fixed support LD + XS

Pipe Shoe LD - HV + 2 x Guiding Set FS resp. 2 x Fixed Point Set XS
Pipe Shoe LD - HV + 2 x Guiding Bracket FW F resp. 2 x Fixed Point Bracket XW F

Basis of assessment EC 3, working loads for Pipe Shoes as delivered.
Please note the information on page 59 about the working loads.

DN sizes

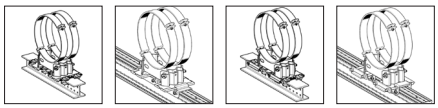

* only for fixed supports

LD - HV	DN	F_x * [kN]	F_y [kN]	$+F_z$ [kN]	$-F_z$ FS 80/120 [kN]	$-F_z$ FW F [kN]	$-F_z$ XS 80/120 [kN]	$-F_z$ XW F [kN]
90	200	37,2	12,9	32,8	28	12,2	32,8	32,8
90	250	37,2	12,9	32,8	28	12,2	32,8	32,8
90	300	37,2	12,9	32,8	28	12,2	32,8	32,8
90	350	37,2	13,1	32,8	28	12,2	32,8	32,8
90	400	31,6	11,9	32,8	28	12,2	32,8	32,8
90	500	20,8	9,4	32,8	28	12,2	32,8	32,8
90	600	9,5	7,2	32,8	28	12,2	32,8	32,8
150	200	30,8	12,7	32,8	28	12,2	32,8	32,8
150	250	30,8	12,7	32,8	28	12,2	32,8	32,8
150	300	30,8	12,7	32,8	28	12,2	32,8	32,8
150	350	30,8	12,9	32,8	28	12,2	32,8	32,8
150	400	26,3	11,5	32,8	28	12,2	32,8	32,8
150	500	17,3	8,8	32,8	28	12,2	32,8	32,8
150	600	8,1	6,3	32,8	28	12,2	32,8	32,8
200	200	24,6	11,1	32,8	28	12,2	32,8	32,8
200	250	24,6	11,1	32,8	28	12,2	32,8	32,8
200	300	24,6	11,1	32,8	28	12,2	32,8	32,8
200	350	25	11,3	32,8	28	12,2	32,8	32,8
200	400	21,6	10,2	32,8	28	12,2	32,8	32,8
200	500	15,7	8,1	32,8	28	12,2	32,8	32,8
200	600	9,5	6,1	32,8	28	12,2	32,8	32,8

TÜVRheinland CERTIFIED
Regular Production Surveillance
www.tuv.com
ID 0000080821

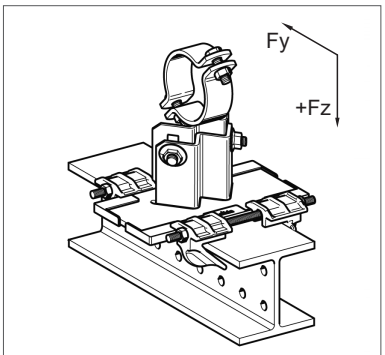

Guided support LA + FS

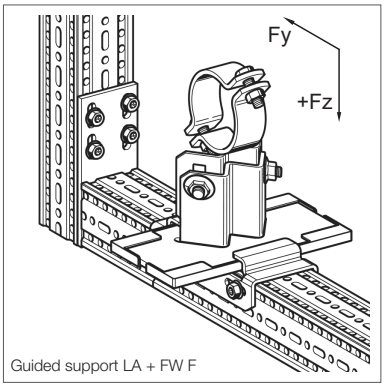

Guided support LA + FW F

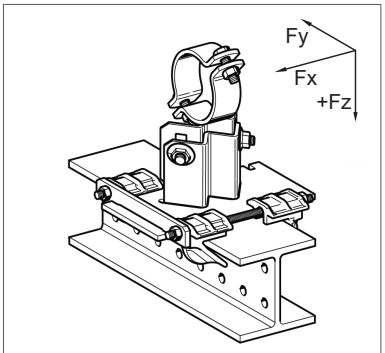

Fixed support LA + XS

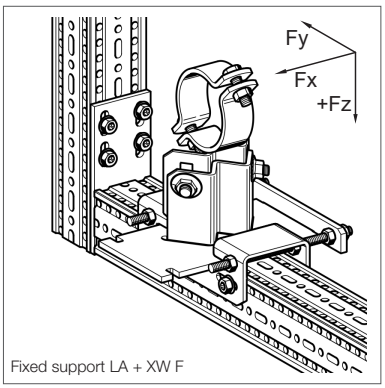

Fixed support LA + XW F

Working loads for Pipe Shoes LA, LC and LD - HV

Pipe Shoe LA - HV + Guiding Set FS resp. Fixed Point Set XS
Pipe Shoe LA - HV + Guiding Bracket FW F resp. Fixed Point Bracket XW F

Basis of assessment EC 3, working loads for Pipe Shoes as delivered.
Please note the information on page 59 about the working loads.

* only for fixed supports

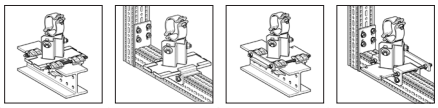

LA - HV	D (Pipe) [mm]	F_x * [kN]	F_y [kN]	$+F_z$ [kN]	$-F_z$ FS 80/120 [kN]	$-F_z$ FW F 80 [kN]	$-F_z$ XS 80/120 [kN]	$-F_z$ XW F 80 [kN]
90	14-18	9,7	7,4	15,4	14	6,1	15,4	15,4
90	18-22	9,7	7,4	15,4	14	6,1	15,4	15,4
90	23-27	9,7	7,4	15,4	14	6,1	15,4	15,4
90	26-30	9,7	7,4	15,4	14	6,1	15,4	15,4
90	30-34	9,7	7,4	15,4	14	6,1	15,4	15,4
90	35-39	9,5	7,3	15,4	14	6,1	15,4	15,4
90	40-44	9,4	7,1	15,4	14	6,1	15,4	15,4
90	45-49	9,2	7	15,4	14	6,1	15,4	15,4
90	50-54	9,1	6,9	15,4	14	6,1	15,4	15,4
90	55-59	8,9	6,7	15,4	14	6,1	15,4	15,4
90	57-61	8,8	6,7	15,4	14	6,1	15,4	15,4
90	62-66	8,7	6,5	15,4	14	6,1	15,4	15,4
90	67-71	8,5	6,4	15,4	14	6,1	15,4	15,4
90	72-77	8,3	6,2	15,4	14	6,1	15,4	15,4
90	78-83	8,1	6	15,4	14	6,1	15,4	15,4
90	84-89	7,9	5,9	15,4	14	6,1	15,4	15,4
90	89-95	7,7	5,7	15,4	14	6,1	15,4	15,4
90	96-102	7,5	5,5	15,4	14	6,1	15,4	15,4
90	102-109	7,3	5,3	15,4	14	6,1	15,4	15,4
90	109-115	7,1	5,1	15,4	14	6,1	15,4	15,4
90	115-122	6,9	4,9	15,4	14	6,1	15,4	15,4
90	122-128	6,7	4,8	15,4	14	6,1	15,4	15,4
90	128-134	6,5	4,6	15,4	14	6,1	15,4	15,4
90	134-140	6,3	4,4	15,4	14	6,1	15,4	15,4
90	140-146	6,1	4,3	15,4	14	6,1	15,4	15,4
90	146-152	5,9	4,1	15,4	14	6,1	15,4	15,4
90	152-158	5,7	3,9	15,4	14	6,1	15,4	15,4
90	157-163	5,5	3,8	15,4	14	6,1	15,4	15,4
90	163-169	5,4	3,6	15,4	14	6,1	15,4	15,4

TÜVRheinland CERTIFIED
Regular Production Surveillance
www.tuv.com
ID 0000080821

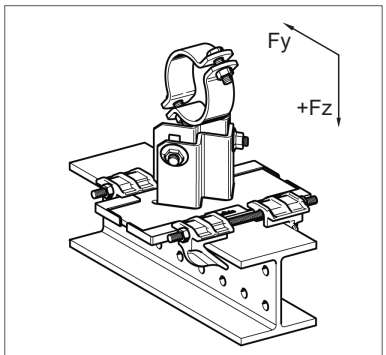

Guided support LA + FS

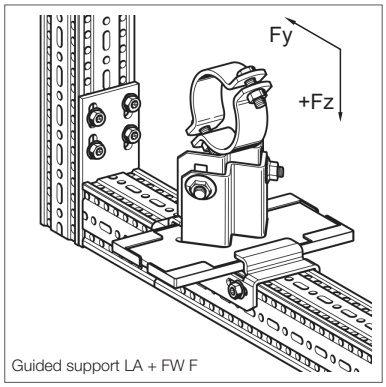

Guided support LA + FW F

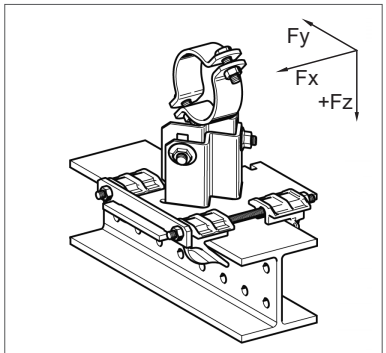

Fixed support LA + XS

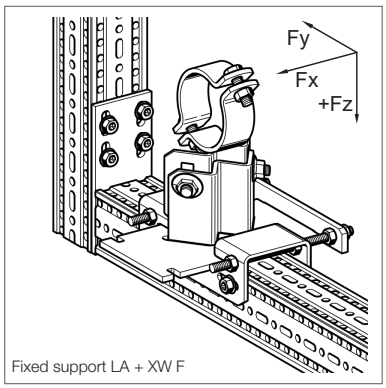

Fixed support LA + XW F

Pipe Shoe LA - HV + Guiding Set FS resp. Fixed Point Set XS
Pipe Shoe LA - HV + Guiding Bracket FW F resp. Fixed Point Bracket XW F

Basis of assessment EC 3, working loads for Pipe Shoes as delivered.
Please note the information on page 59 about the working loads.

* only for fixed supports

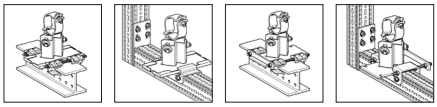

LA - HV	D (Pipe) [mm]	F_x * [kN]	F_y [kN]	$+F_z$ [kN]	$-F_z$ FS 80/120 [kN]	$-F_z$ FW F 80 [kN]	$-F_z$ XS 80/120 [kN]	$-F_z$ XW F 80 [kN]
150	14-18	8,1	5,4	15,4	14	6,1	15,4	15,4
150	18-22	8,1	5,4	15,4	14	6,1	15,4	15,4
150	23-27	8,1	5,4	15,4	14	6,1	15,4	15,4
150	26-30	8,1	5,4	15,4	14	6,1	15,4	15,4
150	30-34	8,1	5,4	15,4	14	6,1	15,4	15,4
150	35-39	8,1	5,3	15,4	14	6,1	15,4	15,4
150	40-44	8	5,2	15,4	14	6,1	15,4	15,4
150	45-49	7,9	5,1	15,4	14	6,1	15,4	15,4
150	50-54	7,8	5	15,4	14	6,1	15,4	15,4
150	55-59	7,7	4,9	15,4	14	6,1	15,4	15,4
150	57-61	7,7	4,8	15,4	14	6,1	15,4	15,4
150	62-66	7,6	4,7	15,4	14	6,1	15,4	15,4
150	67-71	7,5	4,6	15,4	14	6,1	15,4	15,4
150	72-77	7,4	4,5	15,4	14	6,1	15,4	15,4
150	78-83	7,4	4,4	15,4	14	6,1	15,4	15,4
150	84-89	7,3	4,3	15,4	14	6,1	15,4	15,4
150	89-95	7,2	4,1	15,4	14	6,1	15,4	15,4
150	96-102	7,1	4	15,4	14	6,1	15,4	15,4
150	102-109	6,9	3,9	15,4	14	6,1	15,4	15,4
150	109-115	6,9	3,7	15,4	14	6,1	15,4	15,4
150	115-122	6,7	3,6	15,4	14	6,1	15,4	15,4
150	122-128	6,6	3,5	15,4	14	6,1	15,4	15,4
150	128-134	6,5	3,3	15,4	14	6,1	15,4	15,4
150	134-140	6,5	3,2	15,4	14	6,1	15,4	15,4
150	140-146	6,4	3,1	15,4	14	6,1	15,4	15,4
150	146-152	6,3	3	15,4	14	6,1	15,4	15,4
150	152-158	6,2	2,8	15,4	14	6,1	15,4	15,4
150	157-163	6,1	2,7	15,4	14	6,1	15,4	15,4
150	163-169	6,1	2,6	15,4	14	6,1	15,4	15,4

TÜVRheinland CERTIFIED
Regular Production Surveillance
www.tuv.com
ID 0000080821

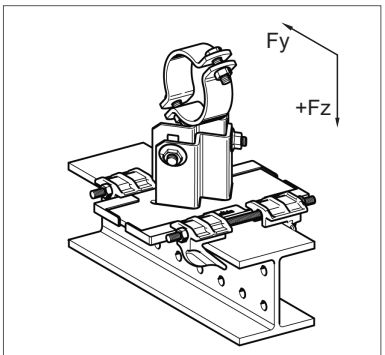

Guided support LA + FS

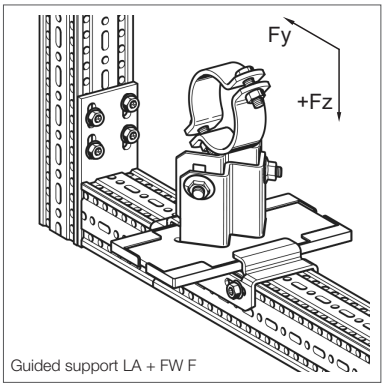

Guided support LA + FW F

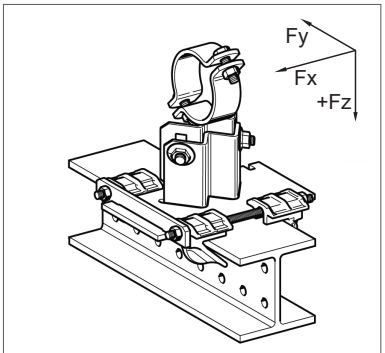

Fixed support LA + XS

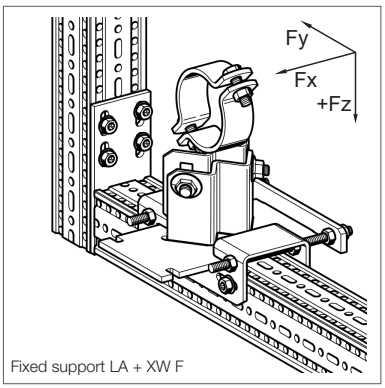

Fixed support LA + XW F

Pipe Shoe LA - HV + Guiding Set FS resp. Fixed Point Set XS
Pipe Shoe LA - HV + Guiding Bracket FW F resp. Fixed Point Bracket XW F

Basis of assessment EC 3, working loads for Pipe Shoes as delivered.
Please note the information on page 59 about the working loads.

* only for fixed supports

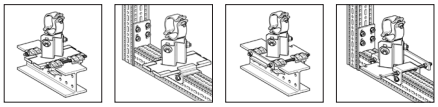

LA - HV	D (Pipe) [mm]	F_x * [kN]	F_y [kN]	$+F_z$ [kN]	$-F_z$ FS 80/120 [kN]	$-F_z$ FW F 80 [kN]	$-F_z$ XS 80/120 [kN]	$-F_z$ XW F 80 [kN]
200	14-18	6,6	4,9	15,4	14	6,1	15,4	15,4
200	18-22	6,6	4,9	15,4	14	6,1	15,4	15,4
200	23-27	6,6	4,9	15,4	14	6,1	15,4	15,4
200	26-30	6,6	4,9	15,4	14	6,1	15,4	15,4
200	30-34	6,6	4,9	15,4	14	6,1	15,4	15,4
200	35-39	6,5	4,8	15,4	14	6,1	15,4	15,4
200	40-44	6,4	4,7	15,4	14	6,1	15,4	15,4
200	45-49	6,4	4,7	15,4	14	6,1	15,4	15,4
200	50-54	6,3	4,6	15,4	14	6,1	15,4	15,4
200	55-59	6,3	4,5	15,4	14	6,1	15,4	15,4
200	57-61	6,3	4,5	15,4	14	6,1	15,4	15,4
200	62-66	6,2	4,4	15,4	14	6,1	15,4	15,4
200	67-71	6,2	4,3	15,4	14	6,1	15,4	15,4
200	72-77	6,1	4,2	15,4	14	6,1	15,4	15,4
200	78-83	6,0	4,1	15,4	14	6,1	15,4	15,4
200	84-89	6,0	4,1	15,4	14	6,1	15,4	15,4
200	89-95	5,9	4,0	15,4	14	6,1	15,4	15,4
200	96-102	5,8	3,9	15,4	14	6,1	15,4	15,4
200	102-109	5,7	3,7	15,4	14	6,1	15,4	15,4
200	109-115	5,7	3,7	15,4	14	6,1	15,4	15,4
200	115-122	5,6	3,5	15,4	14	6,1	15,4	15,4
200	122-128	5,5	3,4	15,4	14	6,1	15,4	15,4
200	128-134	5,5	3,4	15,4	14	6,1	15,4	15,4
200	134-140	5,4	3,3	15,4	14	6,1	15,4	15,4
200	140-146	5,3	3,2	15,4	14	6,1	15,4	15,4
200	146-152	5,3	3,1	15,4	14	6,1	15,4	15,4
200	152-158	5,2	3,0	15,4	14	6,1	15,4	15,4
200	157-163	5,2	2,9	15,4	14	6,1	15,4	15,4
200	163-169	5,1	2,8	15,4	14	6,1	15,4	15,4

TÜVRheinland CERTIFIED
Regular Production Surveillance
www.tuv.com
ID 0000080821

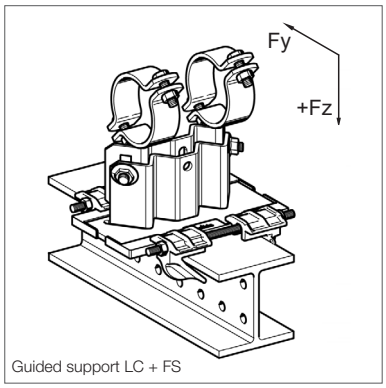

Guided support LC + FS

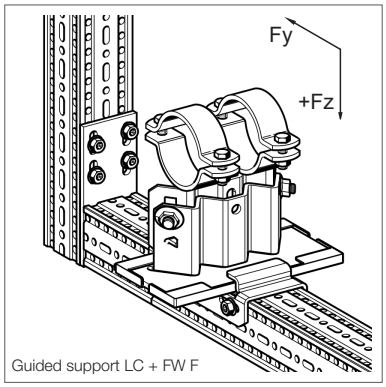

Guided support LC + FW F

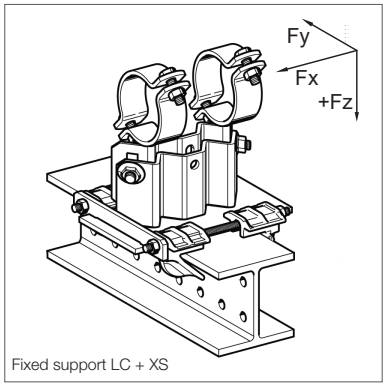

Fixed support LC + XS

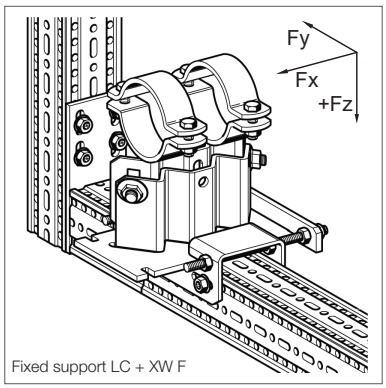

Fixed support LC + XW F

Pipe Shoe LC - HV + Guiding Set FS resp. Fixed Point Set XS
Pipe Shoe LC - HV + Guiding Bracket FW F resp. Fixed Point Bracket XW F

Basis of assessment EC 3, working loads for Pipe Shoes as delivered. Please note the information on page 59 about the working loads.

* only for fixed supports

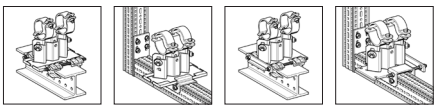

LC - HV	D (Pipe) [mm]	F_x * [kN]	F_y [kN]	$+F_z$ [kN]	$-F_z$ FS 80/120 [kN]	$-F_z$ FW F 80 [kN]	$-F_z$ XS 80/120 [kN]	$-F_z$ XW F 80 [kN]
90	14-18	11,4	6,4	17	14	6,1	17	17
90	18-22	11,4	6,4	17	14	6,1	17	17
90	23-27	11,4	6,4	17	14	6,1	17	17
90	26-30	11,4	6,4	17	14	6,1	17	17
90	30-34	11,4	6,4	17	14	6,1	17	17
90	35-39	11,4	6,3	17	14	6,1	17	17
90	40-44	11,3	6,2	17	14	6,1	17	17
90	45-49	11,3	6,1	17	14	6,1	17	17
90	50-54	11,3	6,0	17	14	6,1	17	17
90	55-59	11,2	6,0	17	14	6,1	17	17
90	57-61	11,2	5,9	17	14	6,1	17	17
90	62-66	11,2	5,8	17	14	6,1	17	17
90	67-71	11,2	5,8	17	14	6,1	17	17
90	72-77	11,1	5,6	17	14	6,1	17	17
90	78-83	11,1	5,5	17	14	6,1	17	17
90	84-89	11,1	5,4	17	14	6,1	17	17
90	89-95	11,0	5,3	17	14	6,1	17	17
90	96-102	11,0	5,2	17	14	6,1	17	17
90	102-109	10,9	5,1	17	14	6,1	17	17
90	109-115	10,9	5,0	17	14	6,1	17	17
90	115-122	10,9	4,9	17	14	6,1	17	17
90	122-128	10,8	4,8	17	14	6,1	17	17
90	128-134	10,8	4,7	17	14	6,1	17	17
90	134-140	10,8	4,6	17	14	6,1	17	17
90	140-146	10,7	4,4	17	14	6,1	17	17
90	146-152	10,7	4,3	17	14	6,1	17	17
90	152-158	10,6	4,2	17	14	6,1	17	17
90	157-163	10,6	4,2	17	14	6,1	17	17
90	163-169	10,6	4,0	17	14	6,1	17	17
90	168-174	10,5	4,0	17	14	6,1	17	17
90	174-180	10,5	3,9	17	14	6,1	17	17
90	181-187	10,5	3,7	17	14	6,1	17	17
90	188-194	10,4	3,6	17	14	6,1	17	17
90	194-200	10,4	3,5	17	14	6,1	17	17
90	201-207	10,3	3,4	17	14	6,1	17	17
90	208-214	10,3	3,3	17	14	6,1	17	17
90	215-221	10,3	3,1	17	14	6,1	17	17
90	222-229	10,2	3,0	17	14	6,1	17	17
90	230-237	10,2	2,9	17	14	6,1	17	17
90	238-245	10,1	2,7	17	14	6,1	17	17
90	246-254	10,1	2,6	17	14	6,1	17	17
90	255-262	10,0	2,4	17	14	6,1	17	17
90	259-266	10,0	2,4	17	14	6,1	17	17
90	266-273	9,9	2,2	17	14	6,1	17	17
90	274-282	9,9	2,1	17	14	6,1	17	17
90	283-291	9,8	1,9	17	14	6,1	17	17
90	292-300	9,8	1,8	17	14	6,1	17	17
90	301-309	9,7	1,6	17	14	6,1	17	17
90	310-317	9,7	1,5	17	14	6,1	17	17
90	317-324	9,6	1,4	17	14	6,1	17	17

TÜVRheinland CERTIFIED
Regular Production Surveillance
www.tuv.com
ID 0000080821

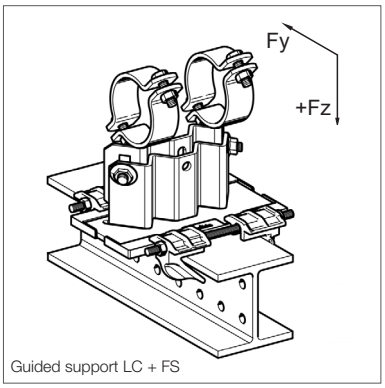

Guided support LC + FS

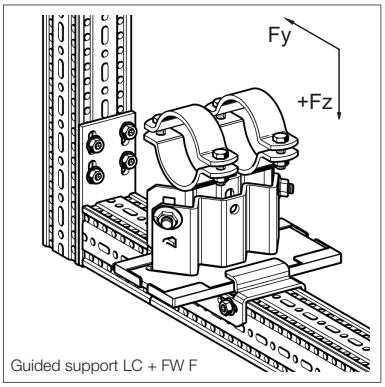

Guided support LC + FW F

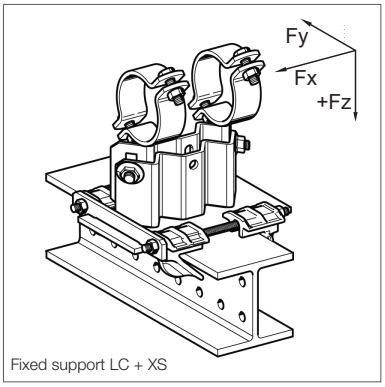

Fixed support LC + XS

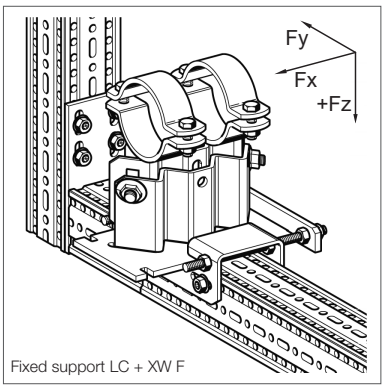

Fixed support LC + XW F

Pipe Shoe LC - HV + Guiding Set FS FS resp. Fixed Point Set XS
Pipe Shoe LC - HV + Guiding Bracket FW F resp. Fixed Point Bracket XW F

Basis of assessment EC 3, working loads for Pipe Shoes as delivered.
Please note the information on page 59 about the working loads.

* only for fixed supports

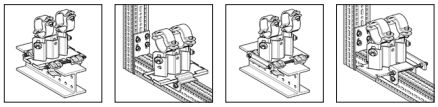

LC - HV	D (Pipe) [mm]	F_x * [kN]	F_y [kN]	$+F_z$ [kN]	$-F_z$ FS 80/120 [kN]	$-F_z$ FW F 80 [kN]	$-F_z$ XS 80/120 [kN]	$-F_z$ XW F 80 [kN]
150	14-18	8,6	4,7	17	14	6,1	17	17
150	18-22	8,6	4,7	17	14	6,1	17	17
150	23-27	8,6	4,7	17	14	6,1	17	17
150	26-30	8,6	4,7	17	14	6,1	17	17
150	30-34	8,6	4,7	17	14	6,1	17	17
150	35-39	8,6	4,7	17	14	6,1	17	17
150	40-44	8,6	4,6	17	14	6,1	17	17
150	45-49	8,6	4,6	17	14	6,1	17	17
150	50-54	8,5	4,5	17	14	6,1	17	17
150	55-59	8,5	4,4	17	14	6,1	17	17
150	57-61	8,5	4,4	17	14	6,1	17	17
150	62-66	8,5	4,4	17	14	6,1	17	17
150	67-71	8,5	4,3	17	14	6,1	17	17
150	72-77	8,5	4,2	17	14	6,1	17	17
150	78-83	8,5	4,2	17	14	6,1	17	17
150	84-89	8,5	4,1	17	14	6,1	17	17
150	89-95	8,4	4,0	17	14	6,1	17	17
150	96-102	8,4	4,0	17	14	6,1	17	17
150	102-109	8,4	3,9	17	14	6,1	17	17
150	109-115	8,4	3,8	17	14	6,1	17	17
150	115-122	8,4	3,7	17	14	6,1	17	17
150	122-128	8,4	3,7	17	14	6,1	17	17
150	128-134	8,3	3,6	17	14	6,1	17	17
150	134-140	8,3	3,5	17	14	6,1	17	17
150	140-146	8,3	3,5	17	14	6,1	17	17
150	146-152	8,3	3,4	17	14	6,1	17	17
150	152-158	8,3	3,3	17	14	6,1	17	17
150	157-163	8,3	3,3	17	14	6,1	17	17
150	163-169	8,3	3,2	17	14	6,1	17	17
150	168-174	8,2	3,2	17	14	6,1	17	17
150	174-180	8,2	3,1	17	14	6,1	17	17
150	181-187	8,2	3,0	17	14	6,1	17	17
150	188-194	8,2	3,0	17	14	6,1	17	17
150	194-200	8,2	2,9	17	14	6,1	17	17
150	201-207	8,2	2,8	17	14	6,1	17	17
150	208-214	8,2	2,7	17	14	6,1	17	17
150	215-221	8,1	2,7	17	14	6,1	17	17
150	222-229	8,1	2,6	17	14	6,1	17	17
150	230-237	8,1	2,5	17	14	6,1	17	17
150	238-245	8,1	2,4	17	14	6,1	17	17
150	246-254	8,1	2,3	17	14	6,1	17	17
150	255-262	8,0	2,2	17	14	6,1	17	17
150	259-266	8,0	2,2	17	14	6,1	17	17
150	266-273	8,0	2,1	17	14	6,1	17	17
150	274-282	8,0	2,0	17	14	6,1	17	17
150	283-291	8,0	1,9	17	14	6,1	17	17
150	292-300	7,9	1,8	17	14	6,1	17	17
150	301-309	7,9	1,7	17	14	6,1	17	17
150	310-317	7,9	1,6	17	14	6,1	17	17
150	317-324	7,9	1,5	17	14	6,1	17	17

TÜVRheinland CERTIFIED
Regular Production Surveillance
www.tuv.com
ID 0000080821

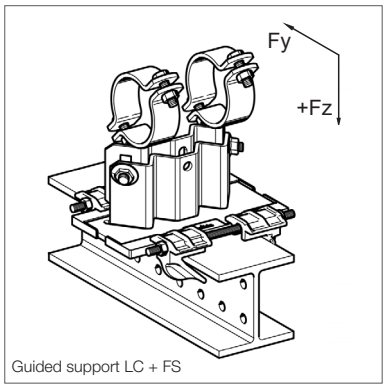

Guided support LC + FS

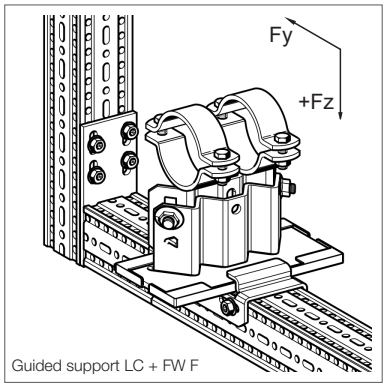

Guided support LC + FW F

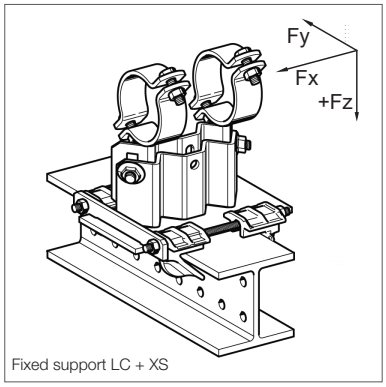

Fixed support LC + XS

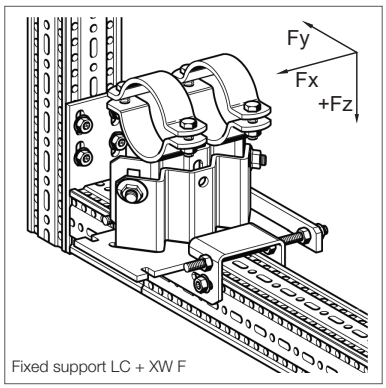

Fixed support LC + XW F

Pipe Shoe LC - HV + Guiding Set FS resp. Fixed Point Set XS
Pipe Shoe LC - HV + Guiding Bracket FW F resp. Fixed Point Bracket XW F

Basis of assessment EC 3, working loads for Pipe Shoes as delivered.
Please note the information on page 59 about the working loads.

* only for fixed supports

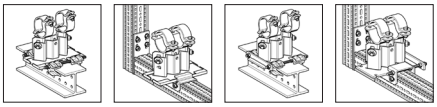

LC - HV	D (Pipe) [mm]	F_x * [kN]	F_y [kN]	$+F_z$ [kN]	$-F_z$ FS 80/120 [kN]	$-F_z$ FW F 80 [kN]	$-F_z$ XS 80/120 [kN]	$-F_z$ XW F 80 [kN]
200	14-18	7,4	5,0	17	14	6,1	17	17
200	18-22	7,4	5,0	17	14	6,1	17	17
200	23-27	7,4	5,0	17	14	6,1	17	17
200	26-30	7,4	5,0	17	14	6,1	17	17
200	30-34	7,4	5,0	17	14	6,1	17	17
200	35-39	7,4	4,9	17	14	6,1	17	17
200	40-44	7,4	4,9	17	14	6,1	17	17
200	45-49	7,4	4,8	17	14	6,1	17	17
200	50-54	7,4	4,8	17	14	6,1	17	17
200	55-59	7,4	4,7	17	14	6,1	17	17
200	57-61	7,4	4,7	17	14	6,1	17	17
200	62-66	7,3	4,6	17	14	6,1	17	17
200	67-71	7,3	4,6	17	14	6,1	17	17
200	72-77	7,3	4,5	17	14	6,1	17	17
200	78-83	7,3	4,4	17	14	6,1	17	17
200	84-89	7,3	4,4	17	14	6,1	17	17
200	89-95	7,3	4,3	17	14	6,1	17	17
200	96-102	7,3	4,2	17	14	6,1	17	17
200	102-109	7,3	4,1	17	14	6,1	17	17
200	109-115	7,3	4,1	17	14	6,1	17	17
200	115-122	7,3	4,0	17	14	6,1	17	17
200	122-128	7,3	3,9	17	14	6,1	17	17
200	128-134	7,2	3,9	17	14	6,1	17	17
200	134-140	7,2	3,8	17	14	6,1	17	17
200	140-146	7,2	3,7	17	14	6,1	17	17
200	146-152	7,2	3,6	17	14	6,1	17	17
200	152-158	7,2	3,6	17	14	6,1	17	17
200	157-163	7,2	3,5	17	14	6,1	17	17
200	163-169	7,2	3,5	17	14	6,1	17	17
200	168-174	7,2	3,4	17	14	6,1	17	17
200	174-180	7,2	3,3	17	14	6,1	17	17
200	181-187	7,2	3,2	17	14	6,1	17	17
200	188-194	7,2	3,2	17	14	6,1	17	17
200	194-200	7,1	3,1	17	14	6,1	17	17
200	201-207	7,1	3,0	17	14	6,1	17	17
200	208-214	7,1	2,9	17	14	6,1	17	17
200	215-221	7,1	2,9	17	14	6,1	17	17
200	222-229	7,1	2,8	17	14	6,1	17	17
200	230-237	7,1	2,7	17	14	6,1	17	17
200	238-245	7,1	2,6	17	14	6,1	17	17
200	246-254	7,1	2,5	17	14	6,1	17	17
200	255-262	7,0	2,4	17	14	6,1	17	17
200	259-266	7,0	2,3	17	14	6,1	17	17
200	266-273	7,0	2,3	17	14	6,1	17	17
200	274-282	7,0	2,2	17	14	6,1	17	17
200	283-291	7,0	2,1	17	14	6,1	17	17
200	292-300	7,0	2,0	17	14	6,1	17	17
200	301-309	7,0	1,8	17	14	6,1	17	17
200	310-317	7,0	1,8	17	14	6,1	17	17
200	317-324	7,0	1,7	17	14	6,1	17	17

TÜVRheinland CERTIFIED
Regular Production Surveillance
www.tuv.com
ID 0000080821

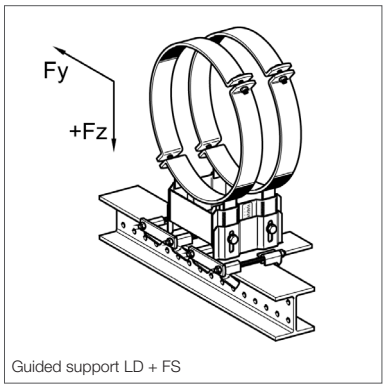

Guided support LD + FS

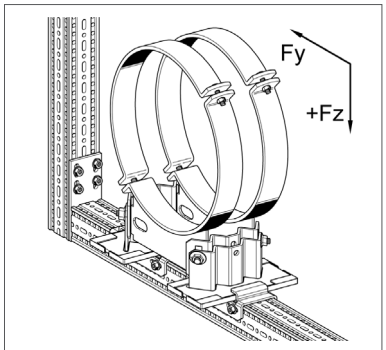

Guided support LD + FW F

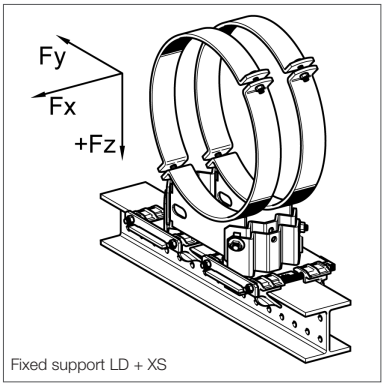

Fixed support LD + XS

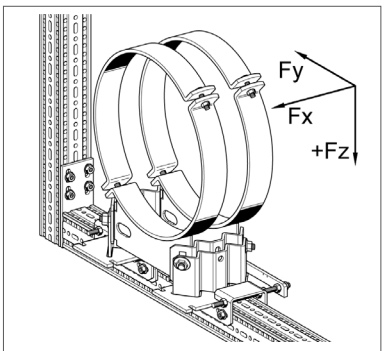

Fixed support LD + XW F

Pipe Shoe LC - HV + Guiding Set FS resp. Fixed Point Set XS
Pipe Shoe LC - HV + Guiding Bracket FW F resp. Fixed Point Bracket XW F

Basis of assessment EC 3, working loads for Pipe Shoes as delivered.
Please note the information on page 59 about the working loads.

* only for fixed supports

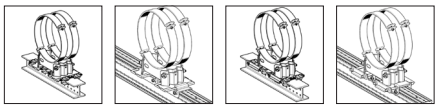

LD - HV	D (Pipe) [mm]	F_x * [kN]	F_y [kN]	+ F_z [kN]	- F_z FS 80/120 [kN]	- F_z FW F 80 [kN]	- F_z XS 80/120 [kN]	- F_z XW F 80 [kN]
90	215-221	37,2	12,9	32,8	28	12,2	32,8	32,8
90	222-229	37,2	12,9	32,8	28	12,2	32,8	32,8
90	230-237	37,2	12,9	32,8	28	12,2	32,8	32,8
90	238-245	37,2	12,9	32,8	28	12,2	32,8	32,8
90	246-254	37,2	12,9	32,8	28	12,2	32,8	32,8
90	255-262	37,2	12,9	32,8	28	12,2	32,8	32,8
90	259-266	37,2	12,9	32,8	28	12,2	32,8	32,8
90	266-273	37,2	12,9	32,8	28	12,2	32,8	32,8
90	274-282	37,2	12,9	32,8	28	12,2	32,8	32,8
90	283-291	37,2	12,9	32,8	28	12,2	32,8	32,8
90	292-300	37,2	12,9	32,8	28	12,2	32,8	32,8
90	301-309	37,2	12,9	32,8	28	12,2	32,8	32,8
90	310-317	37,2	12,9	32,8	28	12,2	32,8	32,8
90	317-324	37,2	12,9	32,8	28	12,2	32,8	32,8
90	325-333	37,2	12,9	32,8	28	12,2	32,8	32,8
90	334-342	37,2	12,9	32,8	28	12,2	32,8	32,8
90	343-350	37,2	12,9	32,8	28	12,2	32,8	32,8
90	349-356	37,2	13,1	32,8	28	12,2	32,8	32,8
90	358-365	36,2	12,7	32,8	28	12,2	32,8	32,8
90	366-374	35,2	12,5	32,8	28	12,2	32,8	32,8
90	375-382	34,3	12,3	32,8	28	12,2	32,8	32,8
90	381-388	33,7	12,2	32,8	28	12,2	32,8	32,8
90	389-396	32,8	12,0	32,8	28	12,2	32,8	32,8
90	397-407	31,6	11,9	32,8	28	12,2	32,8	32,8
90	408-418	30,4	11,5	32,8	28	12,2	32,8	32,8
90	419-429	29,2	11,2	32,8	28	12,2	32,8	32,8
90	430-440	28,0	11,0	32,8	28	12,2	32,8	32,8
90	441-451	26,8	10,7	32,8	28	12,2	32,8	32,8
90	447-457	26,2	10,6	32,8	28	12,2	32,8	32,8
90	458-468	25,0	10,3	32,8	28	12,2	32,8	32,8
90	467-477	24,0	10,1	32,8	28	12,2	32,8	32,8
90	477-487	22,9	9,9	32,8	28	12,2	32,8	32,8
90	488-498	21,7	9,6	32,8	28	12,2	32,8	32,8
90	498-508	20,8	9,4	32,8	28	12,2	32,8	32,8
90	509-519	19,4	9,1	32,8	28	12,2	32,8	32,8
90	520-530	18,2	8,9	32,8	28	12,2	32,8	32,8
90	531-541	17,0	8,6	32,8	28	12,2	32,8	32,8
90	542-552	15,8	8,3	32,8	28	12,2	32,8	32,8
90	553-563	14,6	8,1	32,8	28	12,2	32,8	32,8
90	564-574	13,4	7,8	32,8	28	12,2	32,8	32,8
90	575-585	12,2	7,6	32,8	28	12,2	32,8	32,8
90	586-596	11,1	7,3	32,8	28	12,2	32,8	32,8
90	594-604	10,2	7,1	32,8	28	12,2	32,8	32,8
90	600-610	9,5	7,2	32,8	28	12,2	32,8	32,8

TÜVRheinland CERTIFIED
Regular Production Surveillance
www.tuv.com
ID 0000080821

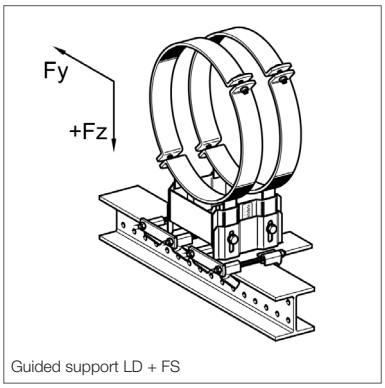

Guided support LD + FS

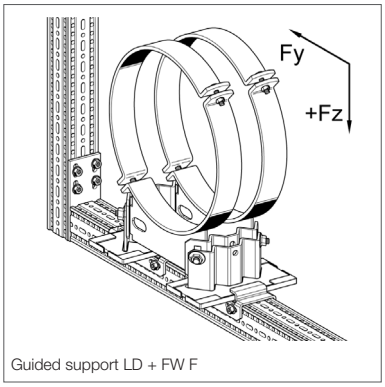

Guided support LD + FW F

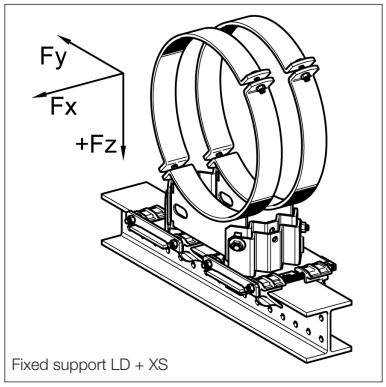

Fixed support LD + XS

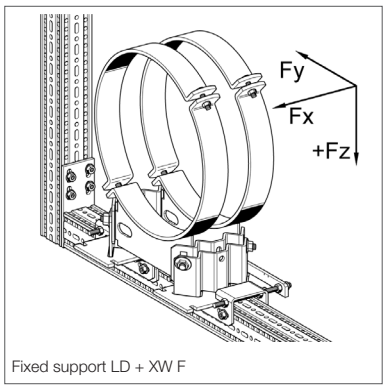

Fixed support LD + XW F

Pipe Shoe LC - HV + Guiding Set FS resp. Fixed Point Set XS
Pipe Shoe LC - HV + Guiding Bracket FW F resp. Fixed Point Bracket XW F

Basis of assessment EC 3, working loads for Pipe Shoes as delivered.
Please note the information on page 59 about the working loads.

* only for fixed supports

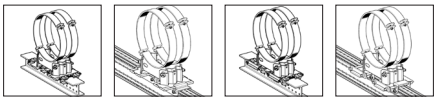

LD - HV	D (Pipe) [mm]	F_x * [kN]	F_y [kN]	$+F_z$ [kN]	$-F_z$ FS 80/120 [kN]	$-F_z$ FW F 80 [kN]	$-F_z$ XS 80/120 [kN]	$-F_z$ XW F 80 [kN]
150	215-221	30,8	12,7	32,8	28	12,2	32,8	32,8
150	222-229	30,8	12,7	32,8	28	12,2	32,8	32,8
150	230-237	30,8	12,7	32,8	28	12,2	32,8	32,8
150	238-245	30,8	12,7	32,8	28	12,2	32,8	32,8
150	246-254	30,8	12,7	32,8	28	12,2	32,8	32,8
150	255-262	30,8	12,7	32,8	28	12,2	32,8	32,8
150	259-266	30,8	12,7	32,8	28	12,2	32,8	32,8
150	266-273	30,8	12,7	32,8	28	12,2	32,8	32,8
150	274-282	30,8	12,7	32,8	28	12,2	32,8	32,8
150	283-291	30,8	12,7	32,8	28	12,2	32,8	32,8
150	292-300	30,8	12,7	32,8	28	12,2	32,8	32,8
150	301-309	30,8	12,7	32,8	28	12,2	32,8	32,8
150	310-317	30,8	12,7	32,8	28	12,2	32,8	32,8
150	317-324	30,8	12,7	32,8	28	12,2	32,8	32,8
150	325-333	30,8	12,7	32,8	28	12,2	32,8	32,8
150	334-342	30,8	12,7	32,8	28	12,2	32,8	32,8
150	343-350	30,8	12,7	32,8	28	12,2	32,8	32,8
150	349-356	30,8	12,9	32,8	28	12,2	32,8	32,8
150	358-365	30,8	12,4	32,8	28	12,2	32,8	32,8
150	366-374	29,2	12,2	32,8	28	12,2	32,8	32,8
150	375-382	28,5	12,0	32,8	28	12,2	32,8	32,8
150	381-388	28,0	11,8	32,8	28	12,2	32,8	32,8
150	389-396	27,2	11,6	32,8	28	12,2	32,8	32,8
150	397-407	26,3	11,5	32,8	28	12,2	32,8	32,8
150	408-418	25,3	11,1	32,8	28	12,2	32,8	32,8
150	419-429	24,3	10,8	32,8	28	12,2	32,8	32,8
150	430-440	23,3	10,5	32,8	28	12,2	32,8	32,8
150	441-451	22,3	10,2	32,8	28	12,2	32,8	32,8
150	447-457	21,8	10,0	32,8	28	12,2	32,8	32,8
150	458-468	20,8	9,8	32,8	28	12,2	32,8	32,8
150	467-477	20,0	9,5	32,8	28	12,2	32,8	32,8
150	477-487	19,1	9,3	32,8	28	12,2	32,8	32,8
150	488-498	18,1	9,0	32,8	28	12,2	32,8	32,8
150	498-508	17,3	8,8	32,8	28	12,2	32,8	32,8
150	509-519	16,2	8,4	32,8	28	12,2	32,8	32,8
150	520-530	15,2	8,1	32,8	28	12,2	32,8	32,8
150	531-541	14,3	7,9	32,8	28	12,2	32,8	32,8
150	542-552	13,3	7,6	32,8	28	12,2	32,8	32,8
150	553-563	12,3	7,3	32,8	28	12,2	32,8	32,8
150	564-574	11,3	7,0	32,8	28	12,2	32,8	32,8
150	575-585	10,3	6,7	32,8	28	12,2	32,8	32,8
150	586-596	9,3	6,4	32,8	28	12,2	32,8	32,8
150	594-604	8,6	6,2	32,8	28	12,2	32,8	32,8
150	600-610	8,1	6,3	32,8	28	12,2	32,8	32,8

TÜVRheinland CERTIFIED
Regular Production Surveillance
www.tuv.com
ID 0000080821

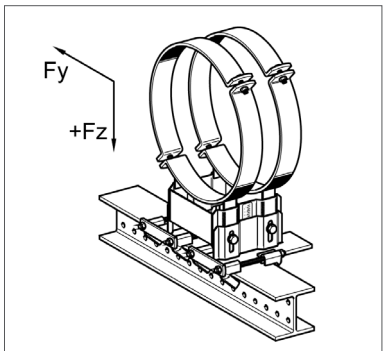

Guided support LD + FS

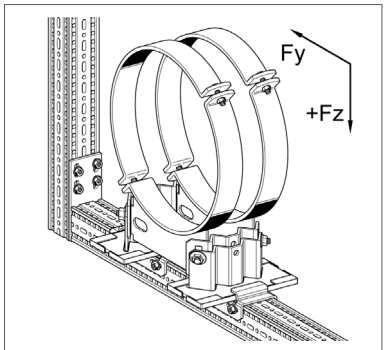

Guided support LD + FW F

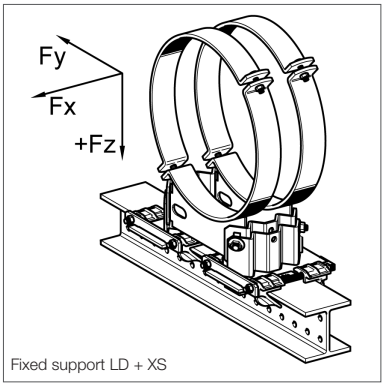

Fixed support LD + XS

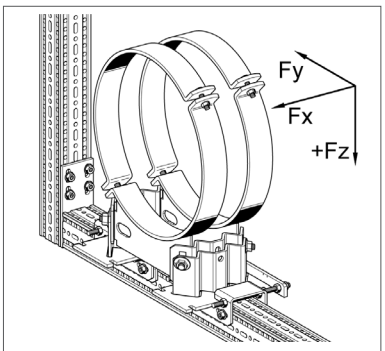

Fixed support LD + XW F

Pipe Shoe LD - HV + 2 x Guiding Set FS resp. 2 x Fixed Point Set XS
Pipe Shoe LD - HV + 2 x Guiding Bracket FW F resp. 2 x Fixed Point Bracket XW F

Basis of assessment EC 3, working loads for Pipe Shoes as delivered.
Please note the information on page 59 about the working loads.

* only for fixed supports

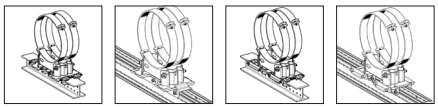

LD - HV	D (Pipe) [mm]	F_x * [kN]	F_y [kN]	+ F_z [kN]	- F_z FS 80/120 [kN]	- F_z FW F 80 [kN]	- F_z XS 80/120 [kN]	- F_z XW F 80 [kN]
200	215-221	24,6	11,1	32,8	28	12,2	32,8	32,8
200	222-229	24,6	11,1	32,8	28	12,2	32,8	32,8
200	230-237	24,6	11,1	32,8	28	12,2	32,8	32,8
200	238-245	24,6	11,1	32,8	28	12,2	32,8	32,8
200	246-254	24,6	11,1	32,8	28	12,2	32,8	32,8
200	255-262	24,6	11,1	32,8	28	12,2	32,8	32,8
200	259-266	24,6	11,1	32,8	28	12,2	32,8	32,8
200	266-273	24,6	11,1	32,8	28	12,2	32,8	32,8
200	274-282	24,6	11,1	32,8	28	12,2	32,8	32,8
200	283-291	24,6	11,1	32,8	28	12,2	32,8	32,8
200	292-300	24,6	11,1	32,8	28	12,2	32,8	32,8
200	301-309	24,6	11,1	32,8	28	12,2	32,8	32,8
200	310-317	24,6	11,1	32,8	28	12,2	32,8	32,8
200	317-324	24,6	11,1	32,8	28	12,2	32,8	32,8
200	325-333	24,6	11,1	32,8	28	12,2	32,8	32,8
200	334-342	24,6	11,1	32,8	28	12,2	32,8	32,8
200	343-350	24,6	11,1	32,8	28	12,2	32,8	32,8
200	349-356	25,0	11,3	32,8	28	12,2	32,8	32,8
200	358-365	24,1	10,9	32,8	28	12,2	32,8	32,8
200	366-374	23,5	10,8	32,8	28	12,2	32,8	32,8
200	375-382	23,1	10,6	32,8	28	12,2	32,8	32,8
200	381-388	22,7	10,5	32,8	28	12,2	32,8	32,8
200	389-396	22,2	10,3	32,8	28	12,2	32,8	32,8
200	397-407	21,6	10,2	32,8	28	12,2	32,8	32,8
200	408-418	20,9	9,8	32,8	28	12,2	32,8	32,8
200	419-429	20,3	9,6	32,8	28	12,2	32,8	32,8
200	430-440	19,6	9,4	32,8	28	12,2	32,8	32,8
200	441-451	19,0	9,2	32,8	28	12,2	32,8	32,8
200	447-457	18,6	9,0	32,8	28	12,2	32,8	32,8
200	458-468	17,9	8,8	32,8	28	12,2	32,8	32,8
200	467-477	17,4	8,6	32,8	28	12,2	32,8	32,8
200	477-487	16,8	8,4	32,8	28	12,2	32,8	32,8
200	488-498	16,1	8,2	32,8	28	12,2	32,8	32,8
200	498-508	15,7	8,1	32,8	28	12,2	32,8	32,8
200	509-519	14,9	7,8	32,8	28	12,2	32,8	32,8
200	520-530	14,2	7,5	32,8	28	12,2	32,8	32,8
200	531-541	13,6	7,3	32,8	28	12,2	32,8	32,8
200	542-552	12,9	7,1	32,8	28	12,2	32,8	32,8
200	553-563	12,3	6,9	32,8	28	12,2	32,8	32,8
200	564-574	11,6	6,6	32,8	28	12,2	32,8	32,8
200	575-585	11,0	6,4	32,8	28	12,2	32,8	32,8
200	586-596	10,3	6,2	32,8	28	12,2	32,8	32,8
200	594-604	9,8	6,0	32,8	28	12,2	32,8	32,8
200	600-610	9,5	6,1	32,8	28	12,2	32,8	32,8

TÜVRheinland CERTIFIED
Regular Production Surveillance
www.tuv.com
ID 0000080821

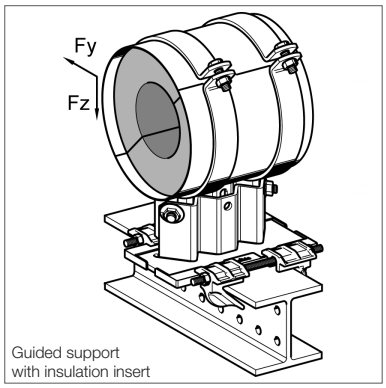

Guided support
with insulation insert

Working loads for Supports with insulation insert and suspension

Pipe Shoe LK - HV + Guiding Set FS 80/120

Basis of assessment EC 3, working loads for Pipe Shoes as delivered.
Please note the information on page 59 about the working loads.

LK - HV	D (Pipe) [mm]	F_y [kN]	$+F_z$ [kN]
150	33.7	3,1	3,1
150	42.4	3,8	3,8
150	48.3	4,3	4,3
150	60.3	4,0	3,9
150	76.1	2,8	2,8
150	88.9	2,5	2,4
150	114.3	4,5	14,0
150	139.7	4,1	14,0
150	168.3	3,6	14,0
150	219.1	2,8	14,0
150	273.0	1,9	14,0
150	323.9	0,4	14,0

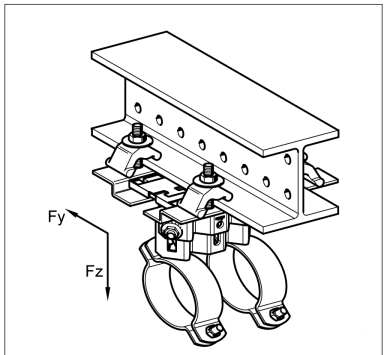

Guided support suspension

Pipe Shoe LA / LC / LD - HV 90 + Guiding Set FS Z 80/120

Basis of assessment EC 3, working loads for Pipe Shoes as delivered.
Please note the information on page 59 about the working loads.

LA / LC / LD - HV	D (Pipe) [mm]	F_y [kN]	$+F_z$ [kN]
90	14-18	5,0	10,0
90	18-22	4,9	10,0
90	23-27	4,9	10,0
90	26-30	4,8	10,0
90	30-34	4,8	10,0
90	35-39	4,7	10,0
90	40-44	4,7	10,0
90	45-49	4,6	10,0
90	50-54	4,5	10,0
90	55-59	4,5	10,0
90	57-61	4,5	10,0
90	62-66	4,4	10,0
90	67-71	4,3	10,0
90	72-77	4,3	10,0
90	78-83	4,2	10,0
90	84-89	4,1	10,0
90	89-95	4,1	10,0
90	96-102	4,0	10,0
90	102-109	3,9	10,0
90	109-115	3,8	10,0
90	115-122	3,8	10,0
90	122-128	3,7	10,0
90	128-134	3,6	10,0
90	134-140	3,5	10,0
90	140-146	3,5	10,0

LA / LC / LD - HV	D (Pipe) [mm]	F_y [kN]	$+F_z$ [kN]
90	146-152	3,4	10,0
90	152-158	3,3	10,0
90	157-163	3,3	10,0
90	163-169	3,2	10,0
90	168-174	3,2	10,0
90	174-180	3,1	10,0
90	181-187	3,0	10,0
90	188-194	2,9	10,0
90	194-200	2,9	10,0
90	201-207	2,8	10,0
90	208-214	2,7	10,0
90	215-221	2,6	10,0
90	222-229	2,5	10,0
90	230-237	2,4	10,0
90	238-245	2,3	10,0
90	246-254	2,2	10,0
90	255-262	2,1	10,0
90	259-266	2,1	10,0
90	266-273	2,0	10,0
90	274-282	1,9	10,0
90	283-291	1,8	10,0
90	292-300	1,7	10,0
90	301-309	1,6	10,0
90	310-317	1,5	10,0
90	317-324	1,4	10,0

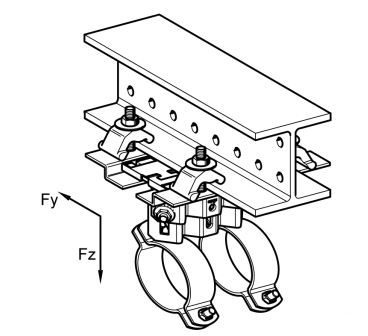

Guided support suspension

Working loads for Supports with insulation insert and suspension

Pipe Shoe LA / LC / LD - HV 150 + Guiding Set FS Z 80/120

Basis of assessment EC 3, working loads for Pipe Shoes as delivered.
Please note the information on page 59 about the working loads.

LA / LC / LD - HV	D (Pipe) [mm]	F_y [kN]	$+F_z$ [kN]
150	14-18	3,3	10,0
150	18-22	3,2	10,0
150	23-27	3,2	10,0
150	26-30	3,2	10,0
150	30-34	3,1	10,0
150	35-39	3,1	10,0
150	40-44	3,1	10,0
150	45-49	3,1	10,0
150	50-54	3,0	10,0
150	55-59	3,0	10,0
150	57-61	3,0	10,0
150	62-66	2,9	10,0
150	67-71	2,9	10,0
150	72-77	2,9	10,0
150	78-83	2,8	10,0
150	84-89	2,8	10,0
150	89-95	2,8	10,0
150	96-102	2,7	10,0
150	102-109	2,7	10,0
150	109-115	2,6	10,0
150	115-122	2,6	10,0
150	122-128	2,6	10,0
150	128-134	2,5	10,0
150	134-140	2,5	10,0
150	140-146	2,4	10,0

LA / LC / LD - HV	D (Pipe) [mm]	F_y [kN]	$+F_z$ [kN]
150	146-152	2,4	10,0
150	152-158	2,4	10,0
150	157-163	2,3	10,0
150	163-169	2,3	10,0
150	168-174	2,3	10,0
150	174-180	2,2	10,0
150	181-187	2,2	10,0
150	188-194	2,1	10,0
150	194-200	2,1	10,0
150	201-207	2,1	10,0
150	208-214	2,0	10,0
150	215-221	2,0	10,0
150	222-229	1,9	10,0
150	230-237	1,9	10,0
150	238-245	1,8	10,0
150	246-254	1,8	10,0
150	255-262	1,7	10,0
150	259-266	1,7	10,0
150	266-273	1,6	10,0
150	274-282	1,6	10,0
150	283-291	1,5	10,0
150	292-300	1,5	10,0
150	301-309	1,4	10,0
150	310-317	1,4	10,0
150	317-324	1,3	10,0

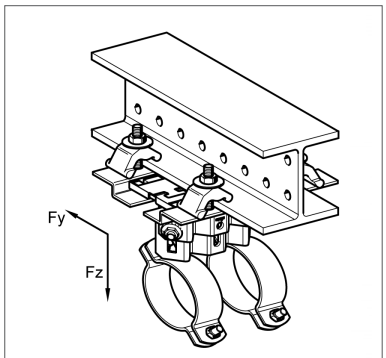

Guided support suspension

Working loads for Supports with insulation insert and suspension

Pipe Shoe LA / LC / LD - HV 200 + Guiding Set FS Z 80/120

Basis of assessment EC 3, working loads for Pipe Shoes as delivered.
Please note the information on page 59 about the working loads.

LA / LC / LD - HV	D (Pipe) [mm]	F_y [kN]	+ F_z [kN]
200	14-18	2,5	10,0
200	18-22	2,5	10,0
200	23-27	2,5	10,0
200	26-30	2,5	10,0
200	30-34	2,5	10,0
200	35-39	2,4	10,0
200	40-44	2,4	10,0
200	45-49	2,4	10,0
200	50-54	2,4	10,0
200	55-59	2,3	10,0
200	57-61	2,3	10,0
200	62-66	2,3	10,0
200	67-71	2,3	10,0
200	72-77	2,3	10,0
200	78-83	2,2	10,0
200	84-89	2,2	10,0
200	89-95	2,2	10,0
200	96-102	2,2	10,0
200	102-109	2,1	10,0
200	109-115	2,1	10,0
200	115-122	2,1	10,0
200	122-128	2,0	10,0
200	128-134	2,0	10,0
200	134-140	2,0	10,0
200	140-146	2,0	10,0

LA / LC / LD - HV	D (Pipe) [mm]	F_y [kN]	+ F_z [kN]
200	146-152	1,9	10,0
200	152-158	1,9	10,0
200	157-163	1,9	10,0
200	163-169	1,9	10,0
200	168-174	1,9	10,0
200	174-180	1,8	10,0
200	181-187	1,8	10,0
200	188-194	1,8	10,0
200	194-200	1,7	10,0
200	201-207	1,7	10,0
200	208-214	1,7	10,0
200	215-221	1,6	10,0
200	222-229	1,6	10,0
200	230-237	1,6	10,0
200	238-245	1,5	10,0
200	246-254	1,5	10,0
200	255-262	1,5	10,0
200	259-266	1,5	10,0
200	266-273	1,4	10,0
200	274-282	1,4	10,0
200	283-291	1,3	10,0
200	292-300	1,3	10,0
200	301-309	1,3	10,0
200	310-317	1,2	10,0
200	317-324	1,2	10,0

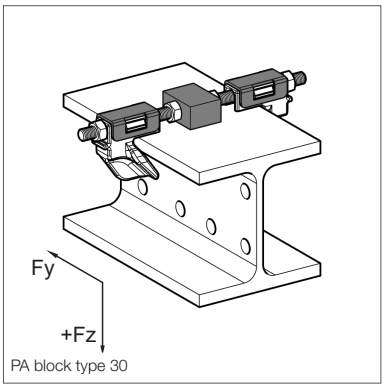

PA block type 30

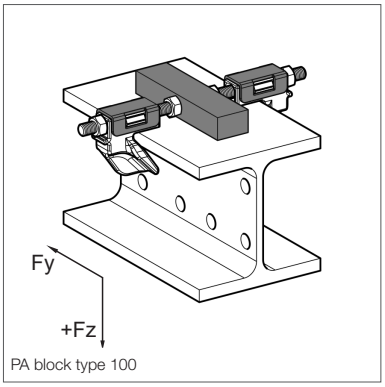

PA block type 100

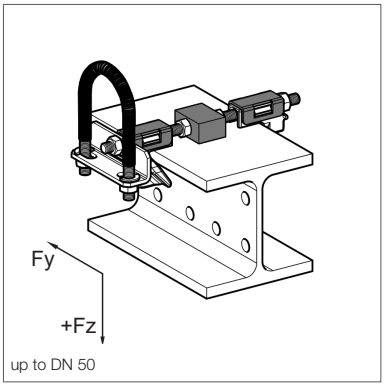

up to DN 50

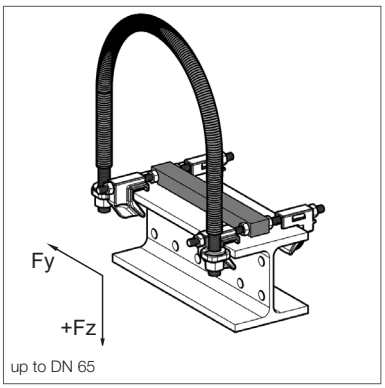

up to DN 65

Working loads for sliding supports LR - H 20, guided supports FR - H 20 and fixed points XR - H 20

Design according to EN 13480-3 Annex J

Sliding support LR - 20 with slide bar type 30 and type 100

DN	+ F_z [kN]
15	4,5
20	4,5
25	4,5
32	4,5
40	4,5
50	4,5
65	9,0
80	9,0
100	9,0
125	9,0
150	9,0
175	9,0
200	9,0
225	9,0
250	9,0
300	9,0

Guided support FR – H 20

DN	F_y [kN]	+ F_z [kN]	- F_z [kN]
15	0,2	4,5	0,2
20	0,2	4,5	0,2
25	0,2	4,5	0,2
32	0,2	4,5	0,2
40	0,2	4,5	0,2
50	0,2	4,5	0,2
65	0,9	9,0	1,1
80	0,9	9,0	1,1
100	0,9	9,0	1,1
125	0,9	9,0	1,1
150	0,9	9,0	1,1
175	0,9	9,0	1,1
200	0,9	9,0	1,1
225	0,9	9,0	1,1
250	0,9	9,0	1,1
300	0,9	9,0	1,1

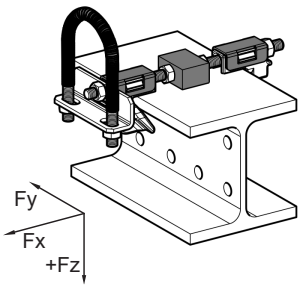

up to DN 50

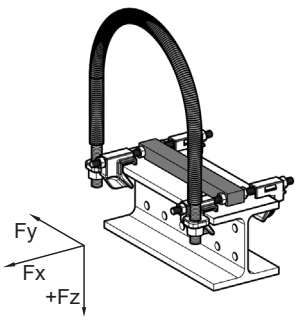

up to DN 65

Fixed points XR – H 20

DN	F_x [kN]	F_y [kN]	$+F_z$ [kN]	$-F_z$ [kN]
15	0,5	0,2	4,5	0,2
20	0,5	0,2	4,5	0,2
25	0,5	0,2	4,5	0,2
32	0,5	0,2	4,5	0,2
40	0,5	0,2	4,5	0,2
50	0,5	0,2	4,5	0,2
65	0,3	0,9	9,0	1,1
80	0,3	0,9	9,0	1,1
100	0,3	0,9	9,0	1,1
125	0,3	0,9	9,0	1,1
150	0,3	0,9	9,0	1,1
175	0,3	0,9	9,0	1,1
200	0,3	0,9	9,0	1,1
225	0,3	0,9	9,0	1,1
250	0,3	0,9	9,0	1,1
300	0,3	0,9	9,0	1,1

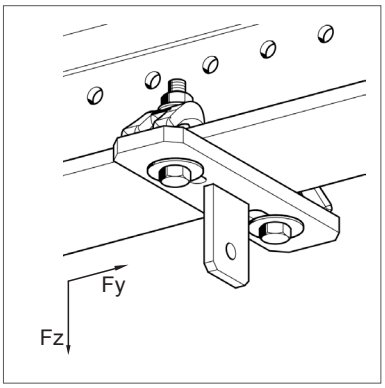

Working loads for Rod Hangers

Design according to EN 13480-3 Annex J
Working loads valid for up to 4 degrees Load Chain inclination.

Beam system Eye-Plate HP 80/99

Typ	F_z [kN]
M10	11,2
M12	12,1
M16	12,5

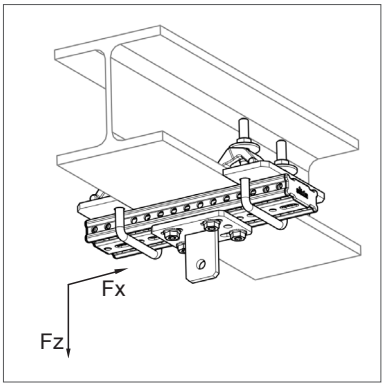

Rod hanger beam connection LKA

Trägerbreite 100-199 mm	
Typ	F_z [kN]
M10	10,9
M12	11,5
M16	12,1

Trägerbreite 200-310 mm	
Typ	F_z [kN]
M10	10,8
M12	11,3
M16	11,9

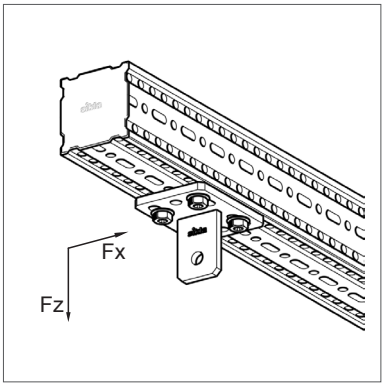

siFramo Eye-Plate HP F 80
siFramo Eye-Plate HP F 100

Typ	F_z [kN]
M10	11,2
M12	12,1
M16	12,5

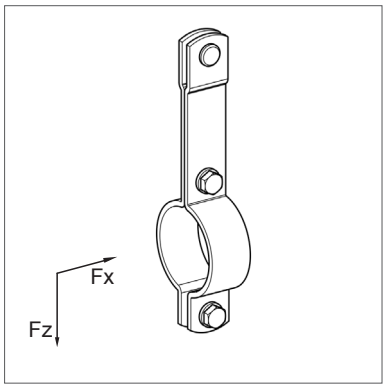

Pipe Clamp Stabil Form C LK

Beam width
100-199 mm

DN	F_z [kN]
15	4,0
20	4,0
25	4,0
32	4,0
40	4,0
50	4,0
65	4,0
80	4,0
100	4,0
125	5,4
150	5,4
175	5,4
200	9,3
250	9,3
300	9,3

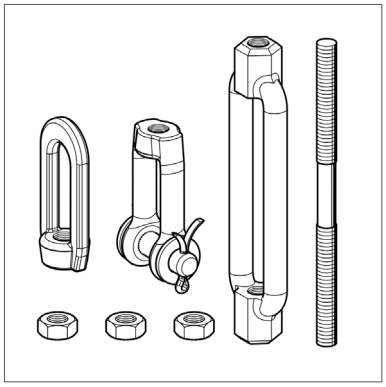

Rod Hanger Load Chain Assembly LKV

Typ	F_z [kN]
M10	11,2
M12	12,1
M16	14,0

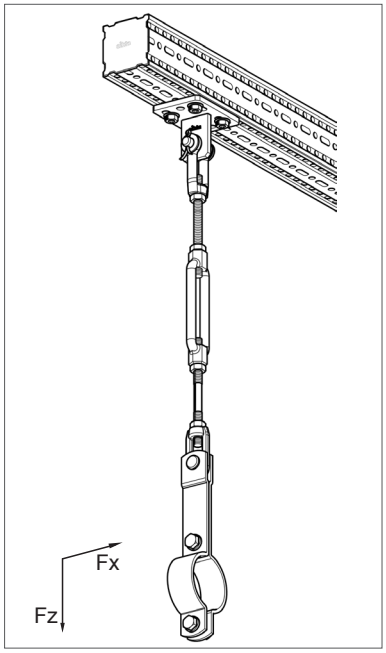

Art-Nr. 116765